GLASS SYSTEMS

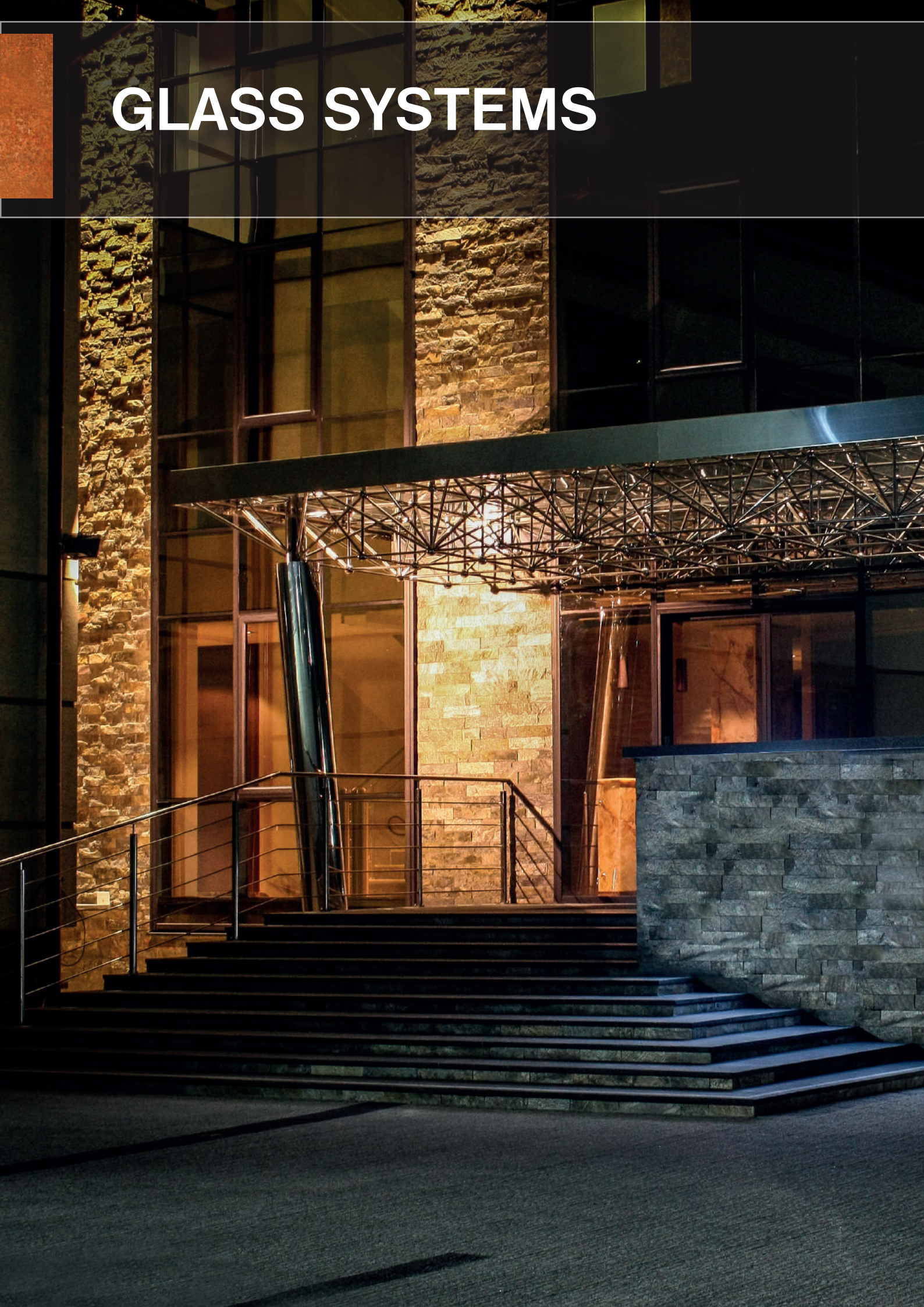

1 CANOPIES

4 - 17

2 SPIDERS

18 - 23

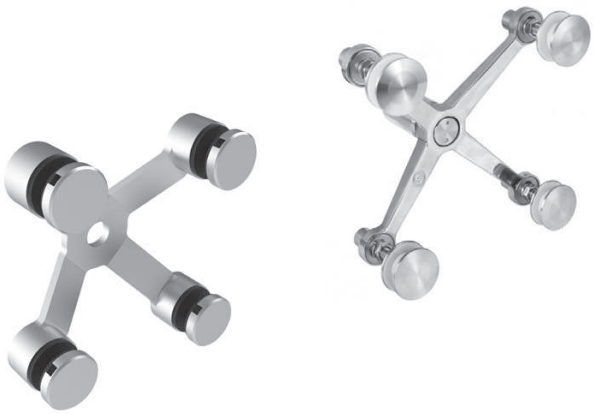

3 SLIDING DOORS

24 - 39

4 SHOWER CABINS

40 - 51

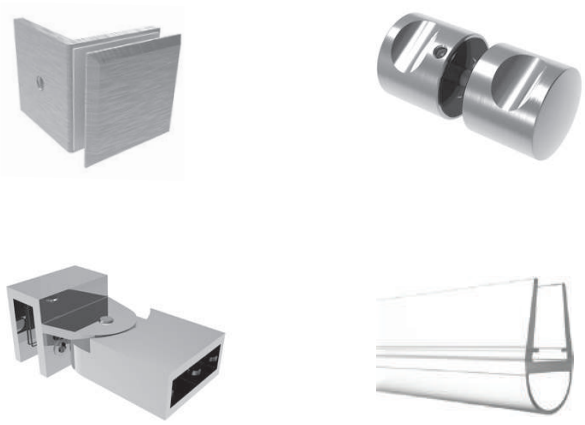

5 SWING DOORS

52 - 59

6 GLASS DOOR COMPONENTS

60 - 71

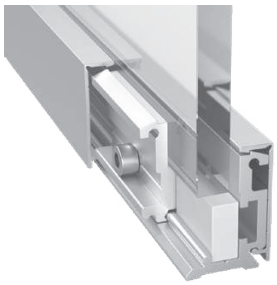

7 GLASS WALL PROFILES

72 - 79

8 GLASS DOOR FRAMES, DOOR HANDLES

80 - 92

1 CANOPIES

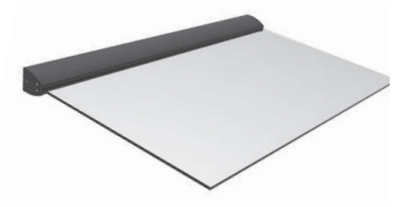

PROFILE SYSTEM

TUBE SYSTEM

ROD SYSTEM

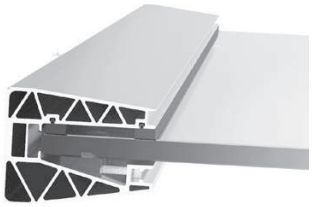

Quality	Finish	Effect	art.	L	glass t	Gmax (kN/m²)	LED
ALUMINIUM	natural	Silver	AL/PR7-1-N-E-1500	1500	12,76-21,52	2,5	✓
			AL/PR7-1-N-E-3000	3000			
			AL/PR7-2-N-E-1500	1500			
			AL/PR7-2-N-E-3000	3000			
			AL/PR7-3-N-E-1500	1500			
			AL/PR7-3-N-E-3000	3000			

glass t	L(m)	art.
12,76 (6.6.2)	3	A19/PR7-13-03.0
16,76 (8.8.2) 17,52 (8.8.4)		A19/PR7-17-18-03.0
20,76 (10.10.2) 21,52 (10.10.4)		A19/PR7-21-22-03.0

SET	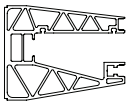								
AL/PR7-1-N-E-1500	1,5 m	2x	6x	8x	1,5 m	-	-	2x1,5 m	1xA19/PR7-X-03.0
AL/PR7-1-N-E-3000	3 m	4x	12x	16x	3 m	-	-	2x3 m	2xA19/PR7-X-03.0
AL/PR7-2-N-E-1500	1,5 m	2x	6x	8x	2x1,5 m	-	1,5 m	1,5 m	1xA19/PR7-X-03.0
AL/PR7-2-N-E-3000	3 m	4x	12x	16x	2x3 m	-	3 m	3 m	2xA19/PR7-X-03.0
AL/PR7-3-N-E-1500	1,5 m	2x	6x	8x	1,5 m	2x1,5 m	-	-	1xA19/PR7-X-03.0
AL/PR7-3-N-E-3000	3 m	4x	12x	16x	3 m	2x3 m	-	-	2xA19/PR7-X-03.0

Alt.1

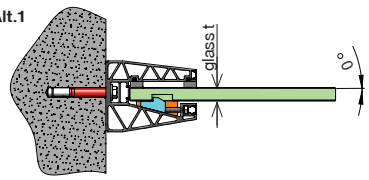

Alt.2

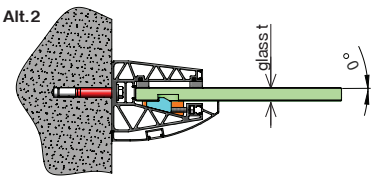

Alt.3

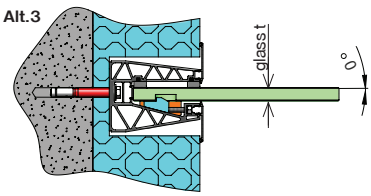

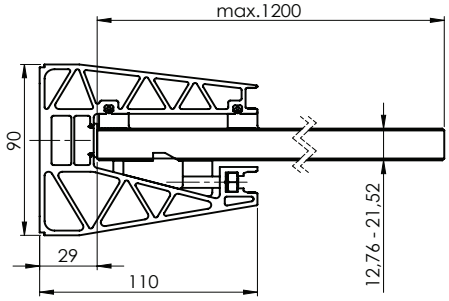

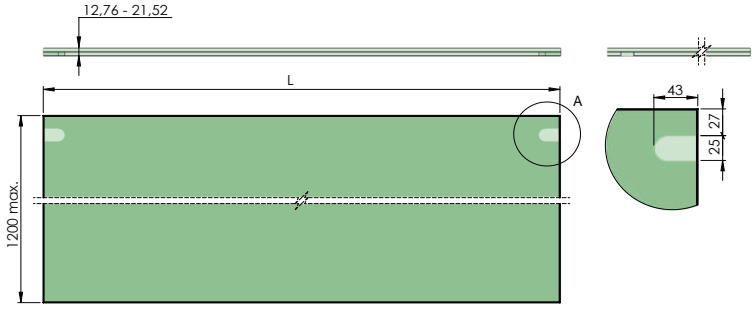

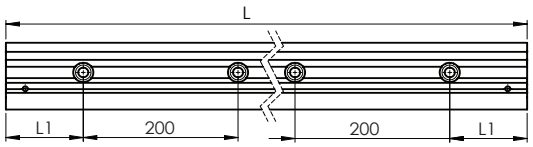

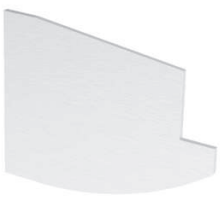

AL/PR7-1-N-E-cap

AL/PR7-2-N-E-cap

Material	Finish	Effect	art.
ALUMINIUM	natural	Silver	AL/PR7-1-N-E-cap
			AL/PR7-2-N-E-cap

Quality	Finish	Effect	art.	L	glass t	G max. (kN)	LED
ANODIZED ALUMINIUM	natural	Silver	AL/PR2-N-E-2500	2500	17,52	1,5	✓

CERTIFICATED: Glass TVG/VSG

	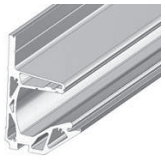	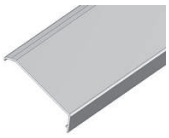				...
AL/PR2-N-E-2500	1x	1x	1x	1x	6x 1m	...

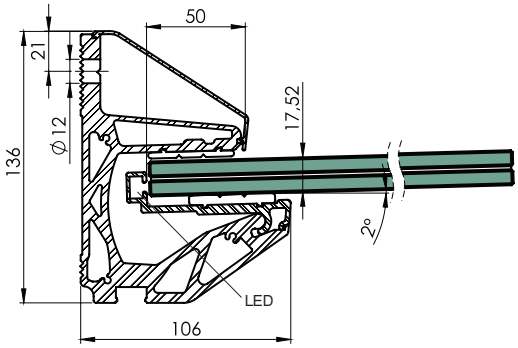

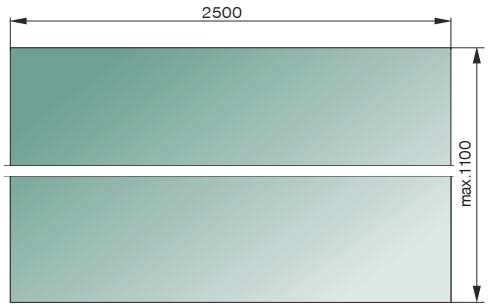

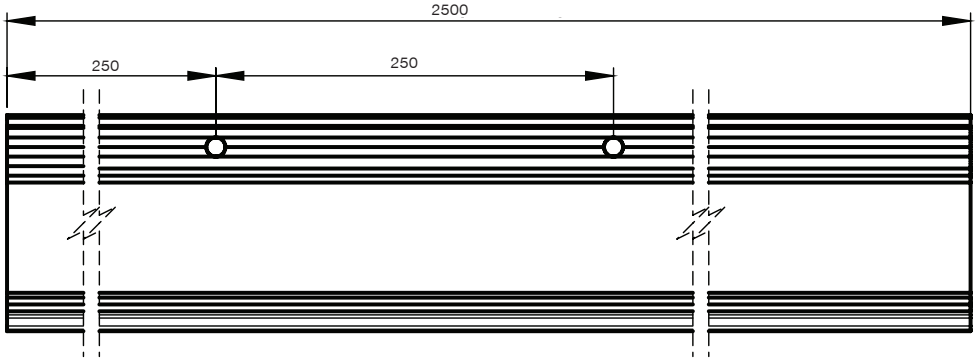

Material	Finish	art.
PVC	Gray	AL/PR2-N-E-cap

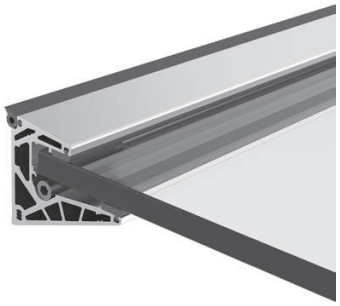

Quality	Finish	Effect	art.	L	glass t	G max. (kN)	LED
ANODIZED ALUMINIUM	natural	Silver	AL/PR3-N-E-3000	3000	16,76	2,0	✓

CERTIFICATED: Glass TVG/VSG

	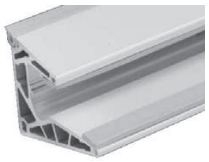				AL/PR3-KIT	...
AL/PR3-N-E-3000	1x	1x	2x	1x	2x	...

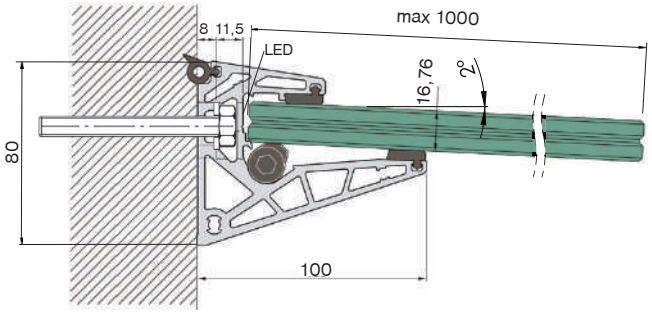

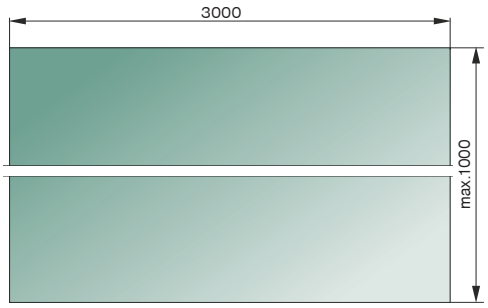

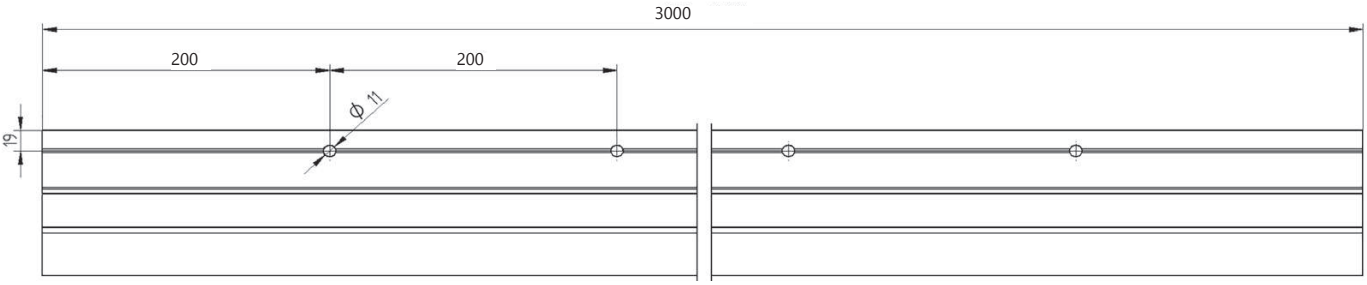

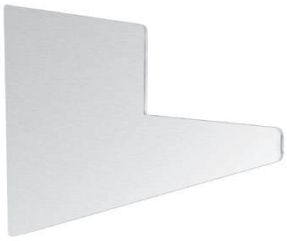

Material	Finish	Effect	art.
ANODIZED ALUMINIUM	natural	Silver	AL/PR3-N-E-cap

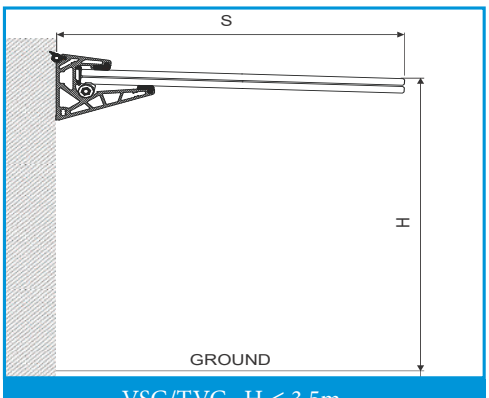

VSG/TVG H < 3,5m

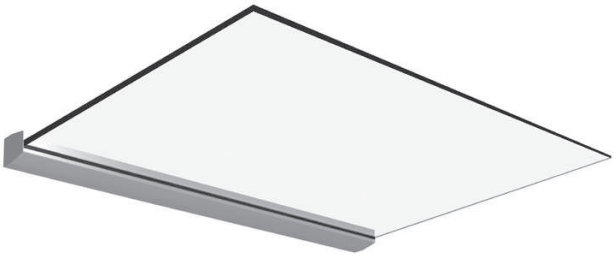

Quality	Finish	Effect	art.	L	glass t	G max. (kN)	LED
ANODIZED ALUMINIUM	natural	Silver	AL/PR4-N-E-3000-NEW	3000	21,52	1,5	✓

new

CERTIFICATED: Glass TVG/VSG

	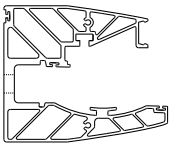	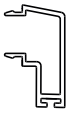				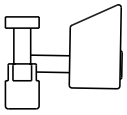	...
AL/PR4-N-E-3000-NEW	3m	3m	3x3m	9x	6x	9x	...

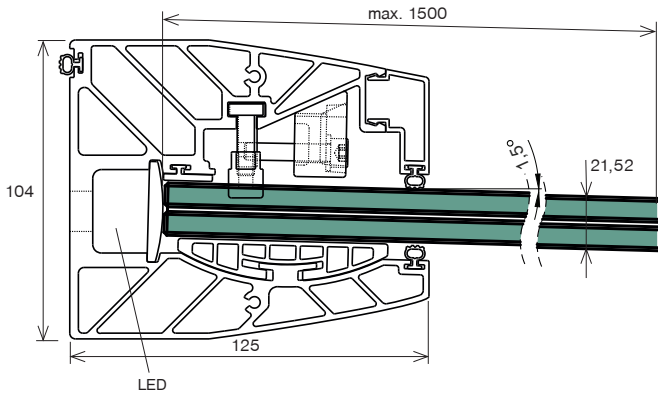

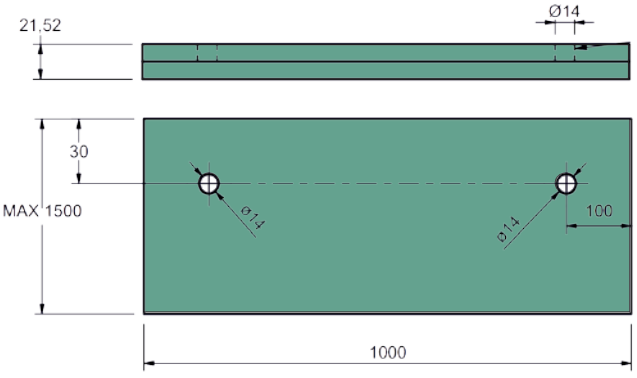

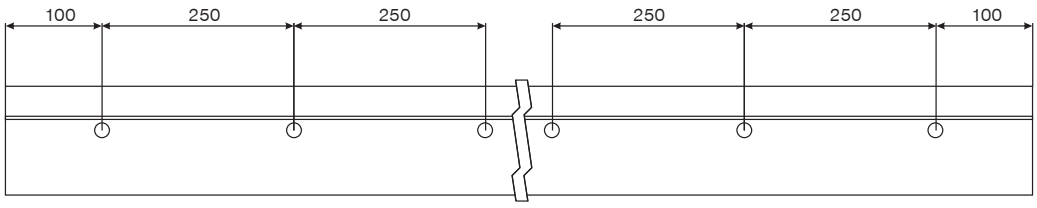

Material	Finish	Effect	art.
ANODIZED ALUMINIUM	natural	Silver	AL/PR4-N-E-cap

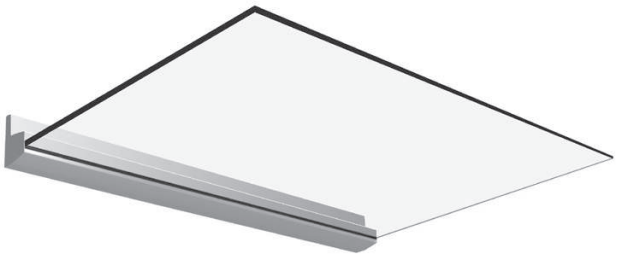

Quality	Finish	Effect	art.	L	glass t	G max. (kN)	LED
ANODIZED ALUMINIUM	natural	Silver	**AL/PR5-N-E-3000**	3000	17,52	1,3	-
			AL/PR5-N-E-1400	1400			

new

	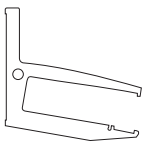	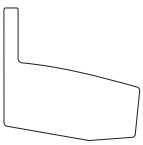				...
AL/PR5-N-E-3000	3m	2x	2x3m	15x	15x	...

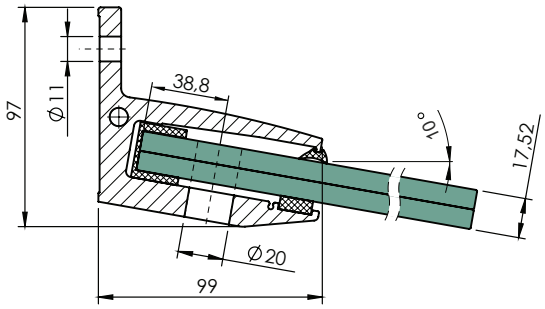

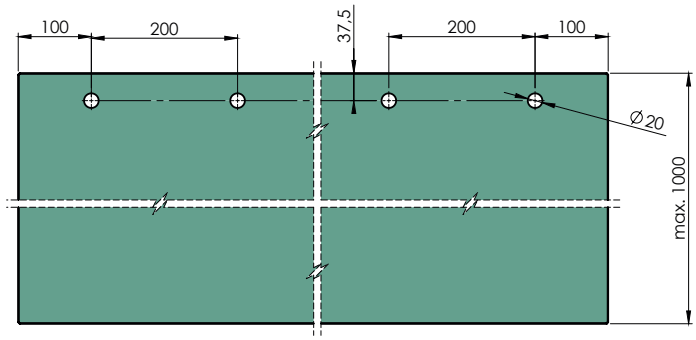

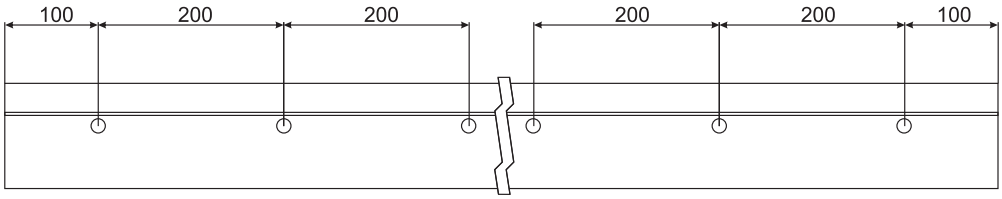

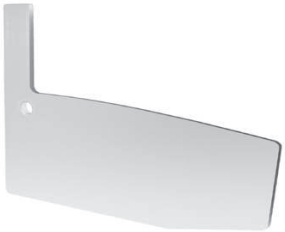

Material	Finish	Effect	art.
ANODIZED ALUMINIUM	natural	Silver	**AL/PR5-N-E-cap**

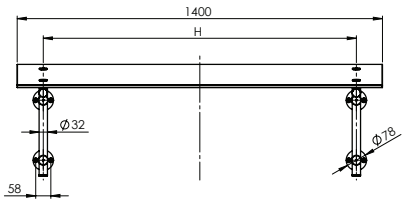

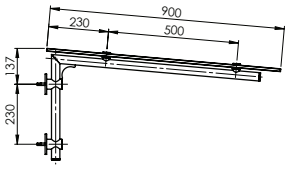

Quality	Finish	art.	glass t
AISI304	satin	GS/PR-825x405	10,76

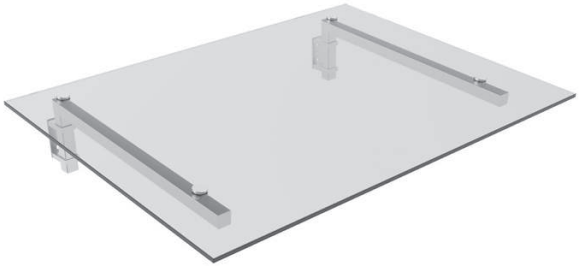

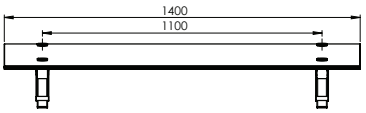

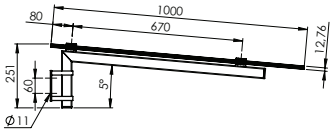

Quality	Finish	art.	glass t
AISI304	satin	GS/PR-800x220	12,76

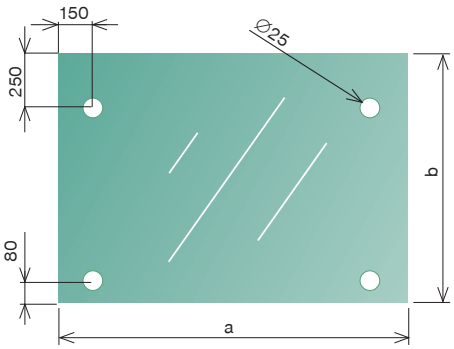

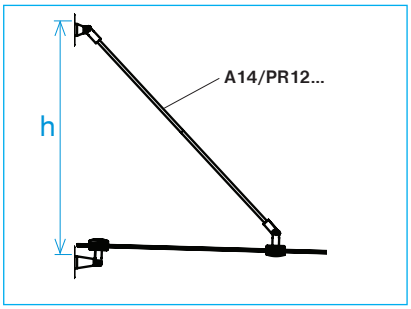

Quality	Color	art.	a	b	h	
VSG/ESG		GS/12,76-140x100-clear	1400	1000	800-930	2 x A14/PR12-1000-M12
		GS/12,76-140x100-milk				
		GS/12,76-180x120-clear	1800	1200	920-1080	2 x A14/PR12-1250-M12
		GS/12,76-180x120-milk				

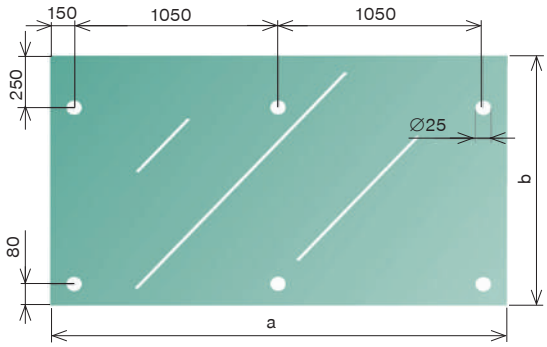

Quality	Color	art.	a	b	h	
VSG/ESG		GS/12,76-240x120-clear	2400	1200	920-1080	3 x A14/PR12-1250-M12
		GS/12,76-240x120-milk				

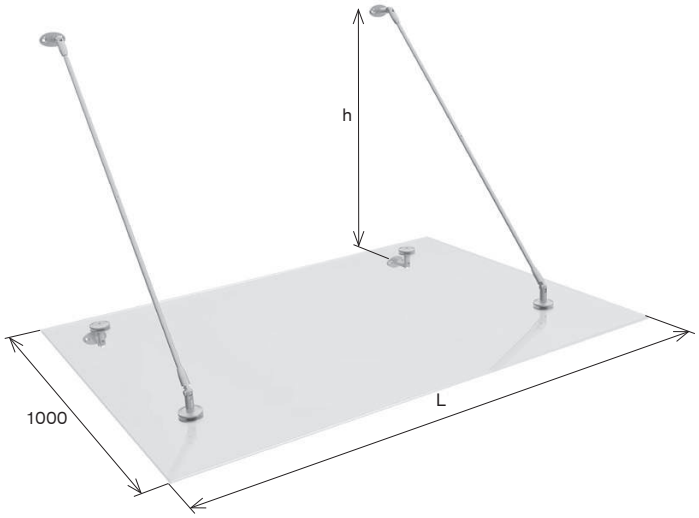

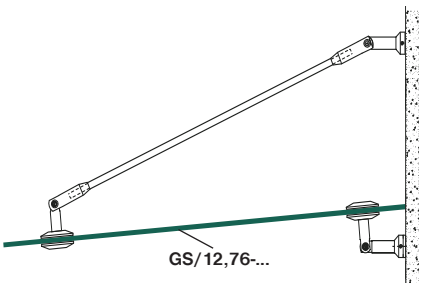

Quality	Finish	art.	h	L	A14/PR70x40-M12	A14/PR70x40-60	A14/PR-60-M12		
AISI304	satin	GS/PR-R3-M12-set-1400	800-930	1400	2x	2x	2x	2 x A14/PR12 -1000-M12	GS/12,76-140x100-clear
AISI316	satin	GS14/PR-R3-M12-set-1400							GS/12,76-140x100-milk
		GS14/PR-R3-M12-set-1400-M							
		GS14/PR-R3-M12-set-1800	920-1080	1800				2 x A14/PR12 -1250-M12	GS/12,76-180x120-clear
		GS14/PR-R3-M12-set-1800-M							GS/12,76-180x120-milk
		GS14/PR-R3-M12-set-2400		2400	3x	3x	3x	3 x A14/PR12 -1250-M12	GS/12,76-240x120-clear
		GS14/PR-R3-M12-set-2400-M							GS/12,76-240x120-milk

top

GS14/PR-R3-M12-set

GS14/PR-R3-M12

Quality	Finish	art.	glass t	A/PR70x40-M12	A/PR70x40-60	A/PR-60-M12	A/PR12-1000-M12
AISI304	satin	GS/PR-R3-M12-set	8,76-17,52	2x	2x	2x	2x
		GS/PR-R3-M12		1x	1x	1x	1x
Quality	Finish	art.	glass t	A14/PR70x40-M12	A14/PR70x40-60	A14/PR-60-M12	A14/PR12-1000-M12
AISI316	satin	GS14/PR-R3-M12-set	8,76-17,52	2x	2x	2x	2x
		GS14/PR-R3-M12		1x	1x	1x	1x

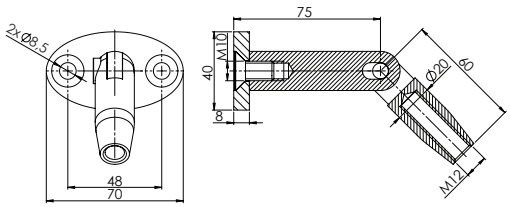

Quality	Finish	art.
AISI304	satin	A/PR70x40-M12
AISI316		A14/PR70x40-M12

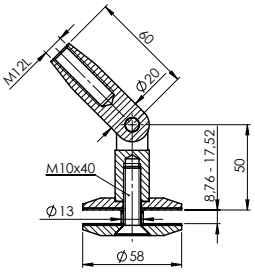

Quality	Finish	art.
AISI304	satin	A/PR-60-M12
AISI316		A14/PR-60-M12

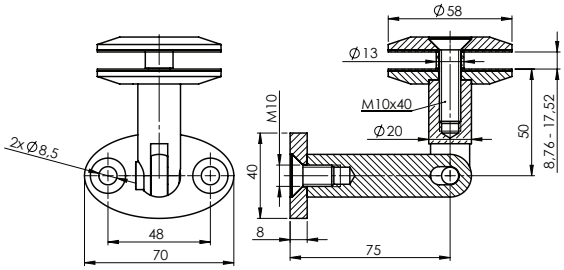

Quality	Finish	art.
AISI304	satin	A/PR70x40-60
AISI316		A14/PR70x40-60

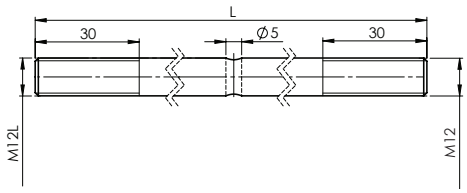

Quality	Finish	art.	L
AISI304	satin	A/PR12-1000-M12	1000
AISI316		A14/PR12-1000-M12	
		A14/PR12-1250-M12	1250
		A14/PR12-1500-M12	1500
		A14/PR12-2000-M12	2000

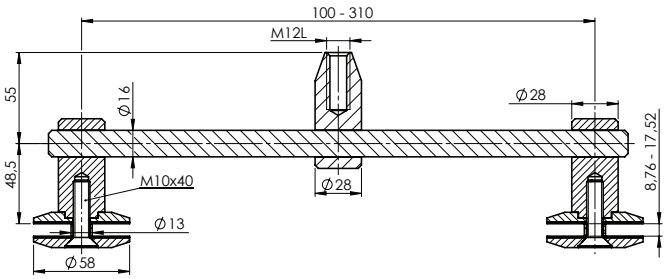

Quality	Finish	art.	A14/PR16-55x28-M10	A14/PR16-350	A14/PR16-71x28-M12
AISI316	satin	A14/PR-2x60-M12	2x	1x	1x

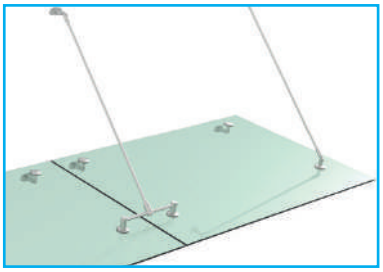

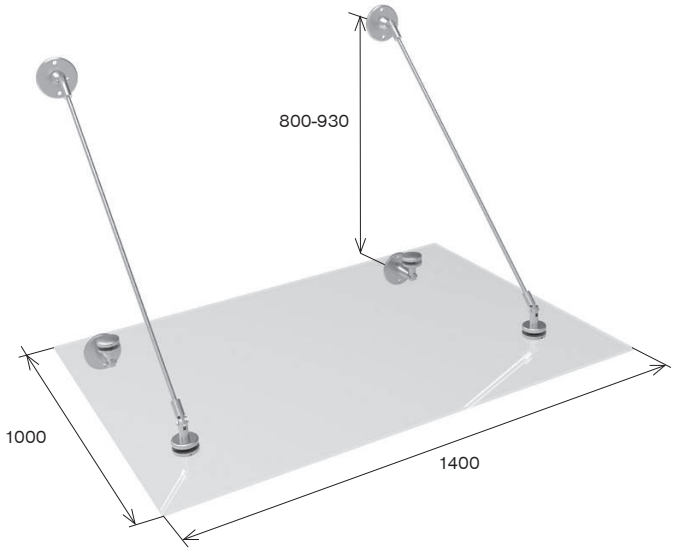

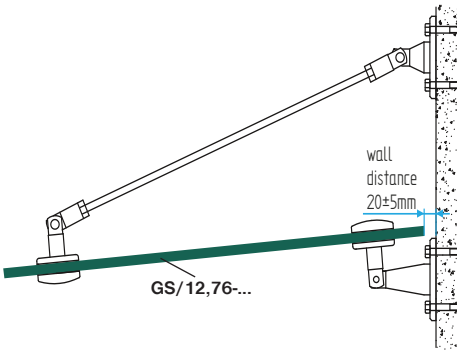

Quality	Finish	art.	A14/120-R	A14/120-70-R	A14/70-R	A14/PR12-1000-M12	GS/12,76-140x100-clear
AISI316	satin	**GS14/PR-R-set/glass**	2x	2x	2x	2x	1x

Quality	Finish	art.	glass t	A14/120-R	A14/120-70-R	A14/70-R	A14/PR12-1000-M12
AISI316	satin	**GS14/PR-R-M12**	12,76-17,52	1x	1x	1x	1x

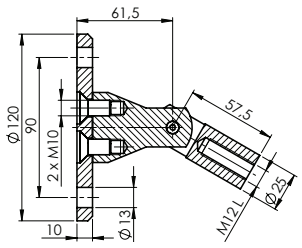

Quality	Finish	art.
AISI316	satin	A14/120-R

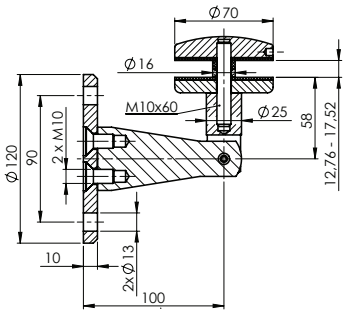

Quality	Finish	art.
AISI316	satin	A14/120-70-R

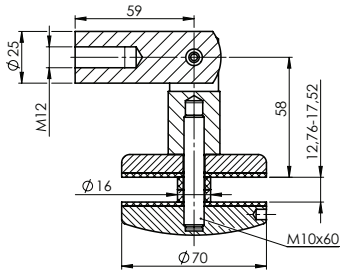

Quality	Finish	art.
AISI316	satin	A14/70-R

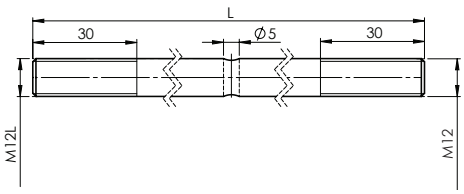

Quality	Finish	art.	L
AISI316	satin	A14/PR12-1000-M12	1000
		A14/PR12-1250-M12	1250
		A14/PR12-1500-M12	1500
		A14/PR12-2000-M12	2000

2 SPIDERS

FIXED

ADJUSTABLE

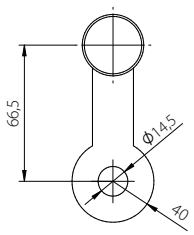

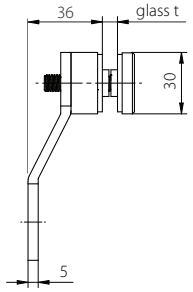

Quality	Finish	art.	glass t	glass hole
AISI304	satin	GS/ZP-101R-95	6-12,76	15

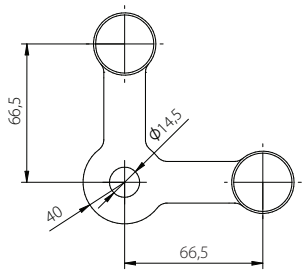

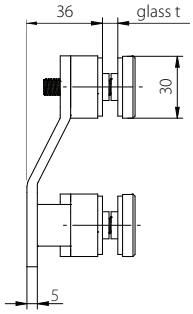

Quality	Finish	art.	glass t	glass hole
AISI304	satin	GS/ZP-102R-90-95	6-12,76	15

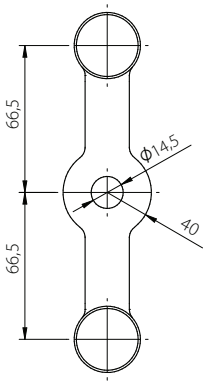

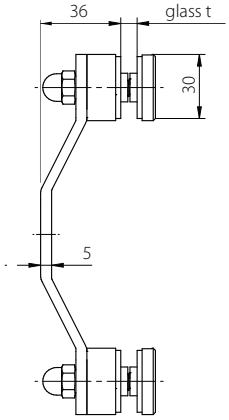

Quality	Finish	art.	glass t	glass hole
AISI304	satin	GS/ZP-102R-180-95	6-12,76	15

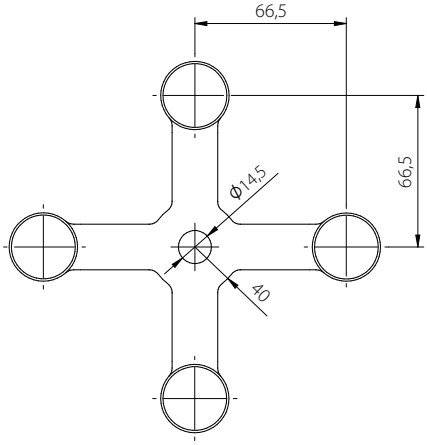

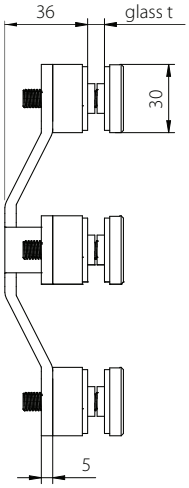

Quality	Finish	art.	glass t	glass hole
AISI304	satin	GS/ZP-104R-95	6-12,76	15

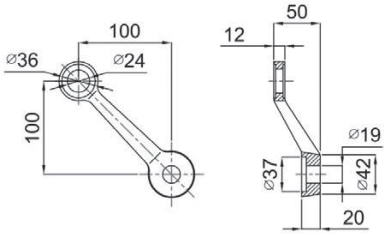

Quality	Finish	art.
AISI304	satin	GS-304/ZA-200-1

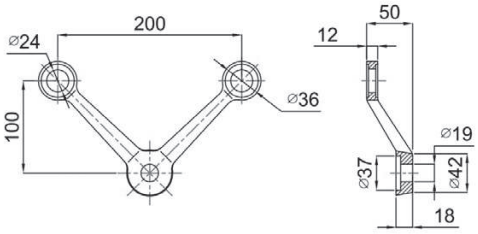

Quality	Finish	art.
AISI304	satin	GS-304/ZA-200-2

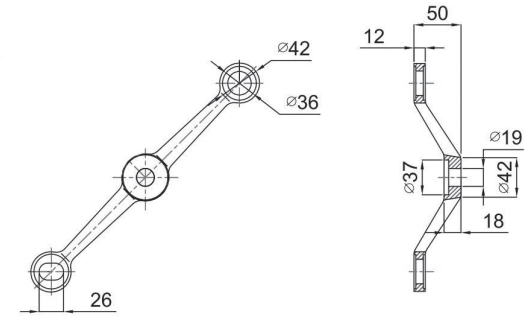

Quality	Finish	art.
AISI304	satin	GS-304/ZA-200-2-1

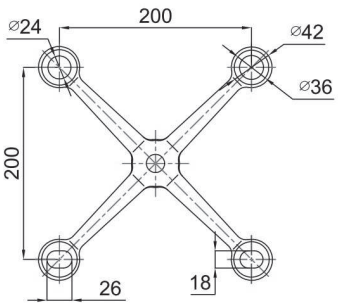

Quality	Finish	art.
AISI304	satin	GS-304/ZA-200-4

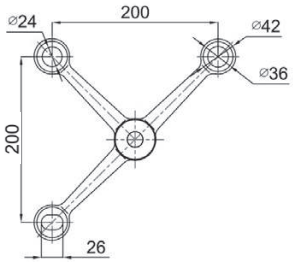

Quality	Finish	art.
AISI304	satin	GS-304/ZA-200-3

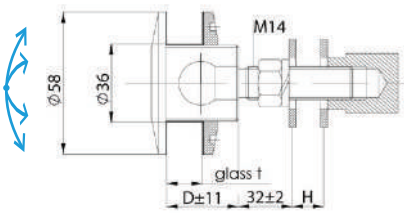

Quality	Finish	art.	glass hole	glass t
AISI304	satin	GS-304/ZA-R55	40	12-26
		GS-304/ZA-R55-B		12-18

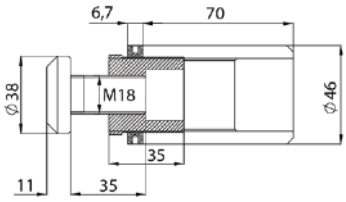

Quality	Finish	art.
AISI304	satin	GS-304/ZA-PIN

3 SLIDING DOORS

PROFILE SYSTEM

MANUAL

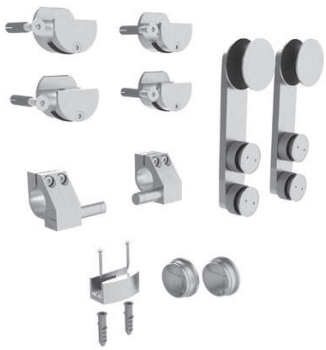

BAR SYSTEM

Components

Quality	Finish	Effect	art.	glass t	glass max. (kg)	Soft Stop
ANODIZED ALUMINIUM	natural	Silver	**GS-AL/P8102/N/E-set**	8-10	80	-

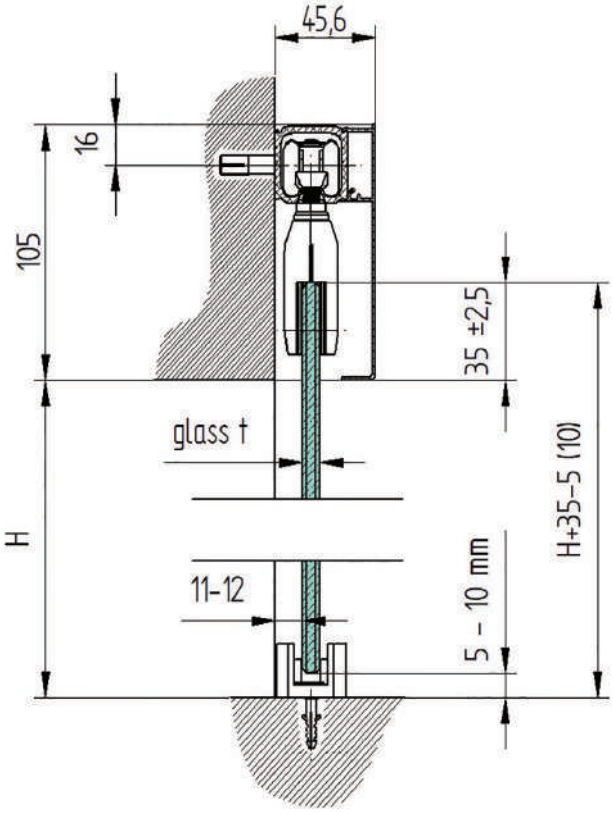

Glass preparation

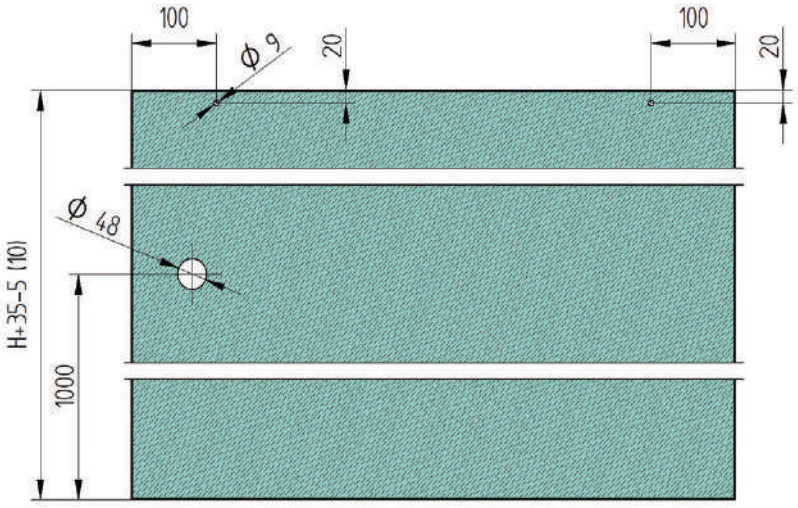

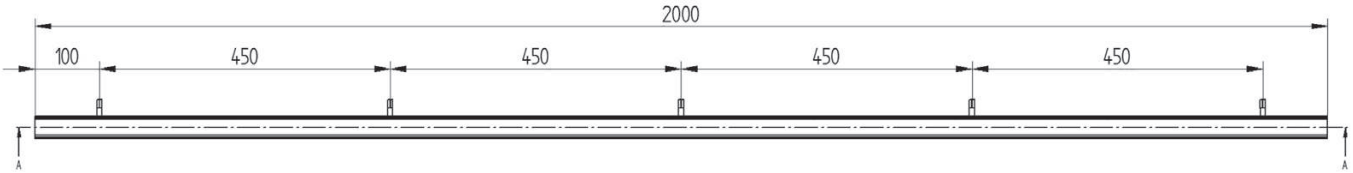

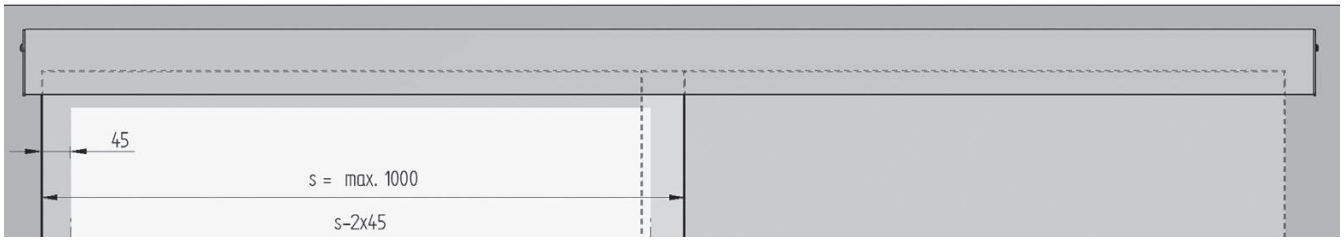

Components

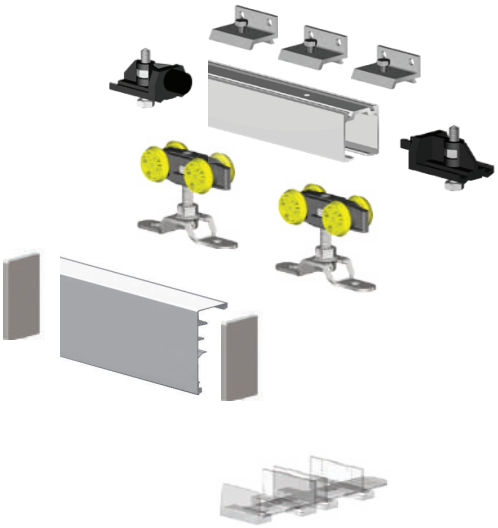

Quality	Finish	Effect	art.	wood t	wood max. (kg)	Soft Stop WS/P8000
ANODIZED ALUMINIUM	natural	Silver	**WS/P8101-SET**	16-45	60	optional

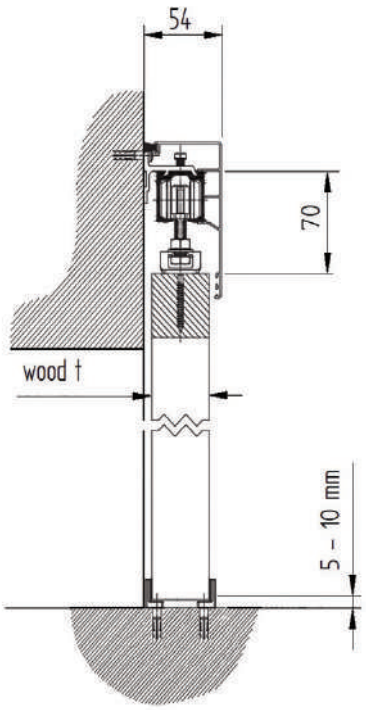

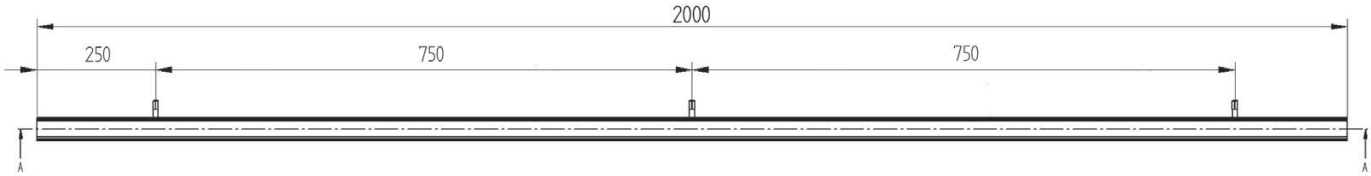

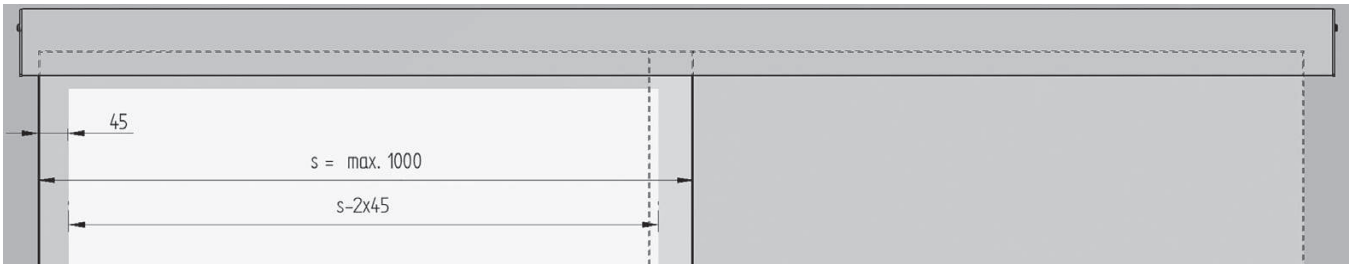

Components

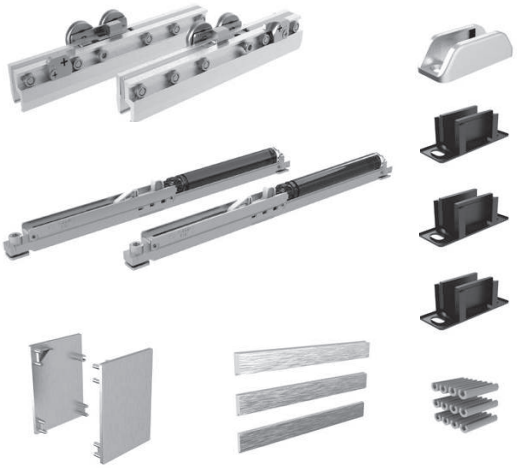

Quality	Finish	Effect	art.	glass t	glass max. (kg)	Soft Stop
ANODIZED ALUMINIUM	natural	Silver	**GS-AL/P8105/N/E-set**	8-12	80	✓

	Accessories		
art.	GS-AL/P8105	GS-AL/LN8105/N/E	GS-AL/LK8105/N/E
Quantity	1x	1x	1x

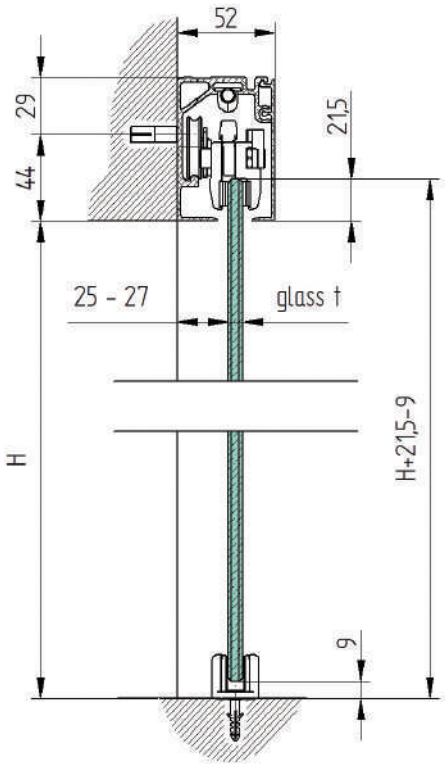

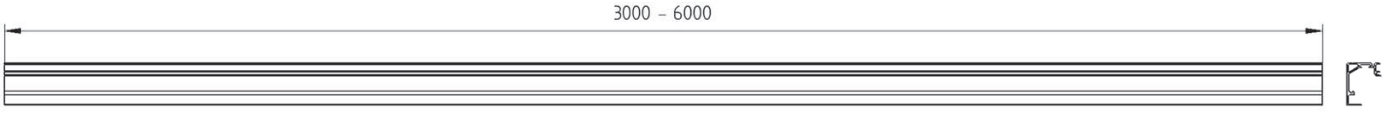

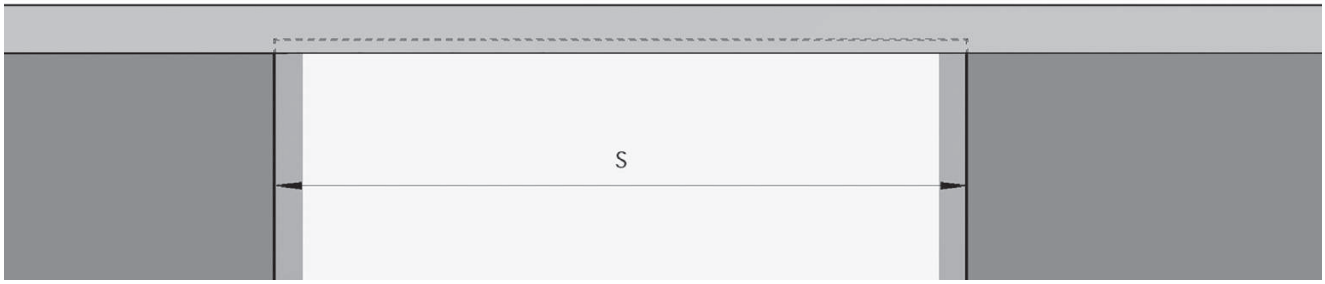

Components

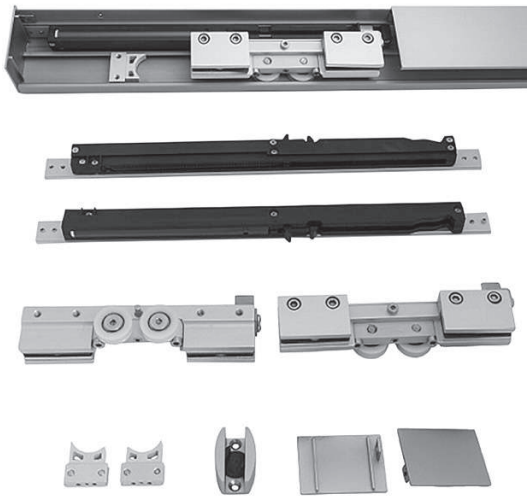

Quality	Finish	Effect	art.	glass t	glass max. (kg)	Soft Stop	(kg)	(kg)
ANODIZED ALUMINIUM	natural	Silver	GS-AL/P8107/N/E-3M	8-12	80	✓	30-60	60-80
		black	GS-BLACK/P8107/N/B-3M					

Accessories					
Quantity	1x	1x	2x	2x	2x

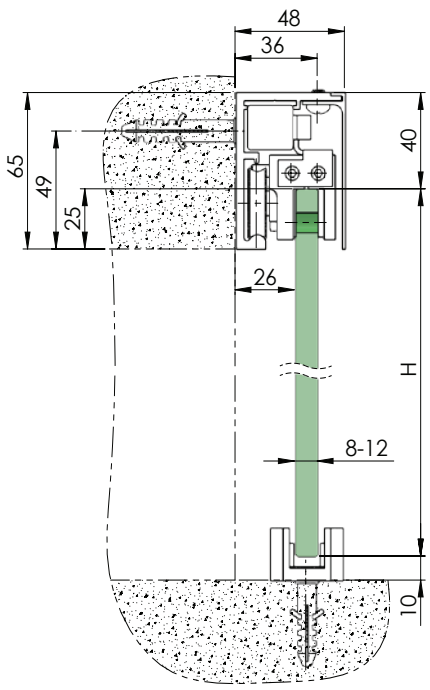

Glass preparation

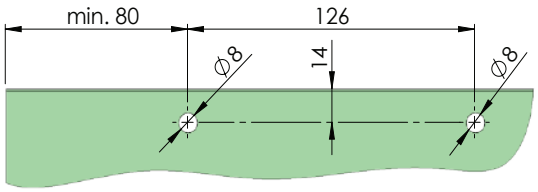

3000

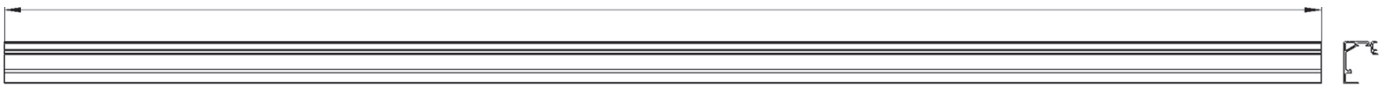

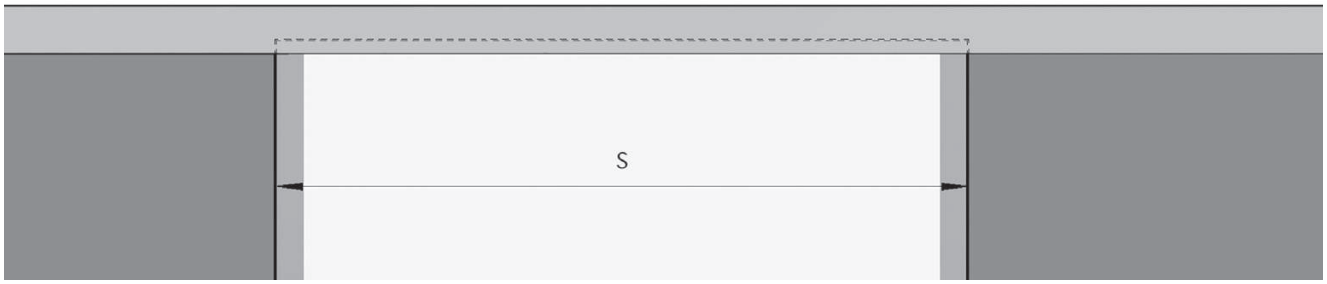

Components

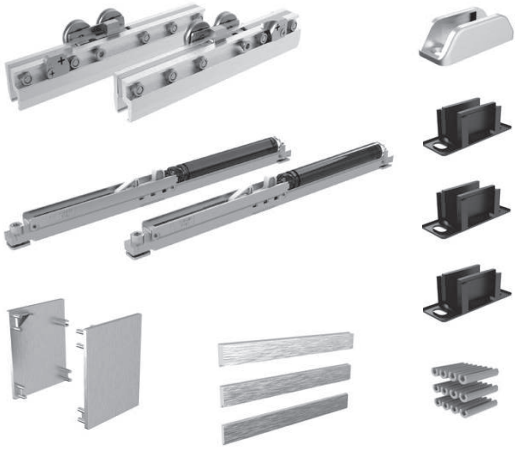

Quality	Finish	Effect	art.	glass t	glass max. (kg)	Soft Stop
ANODIZED ALUMINIUM	natural	Silver	**GS-AL/P8106/N/E-set**	8-12	80	✓

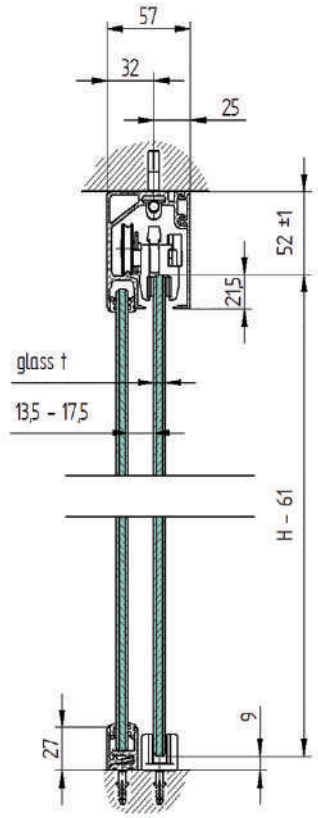

	Accessories				
art.	GS-AL/P8106	GS-AL/LN8106/N/E	GS-AL/LZ8106/N/E	GS-AL/ZP-21x27 /N/E-DIEL	GS-AL/LK8106/N/E
Quantity	1x	1x	1x	1x	1x

+

Profile	glass t			L	Quantity/ pcs
	8	10	12		
	GS-PVC/ZP-2127-8/N/T	GS-PVC/ZP-2127-10/N/T	GS-PVC/ZP-2127-12/N/T	3000	4

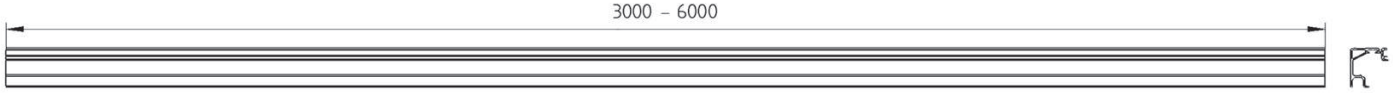

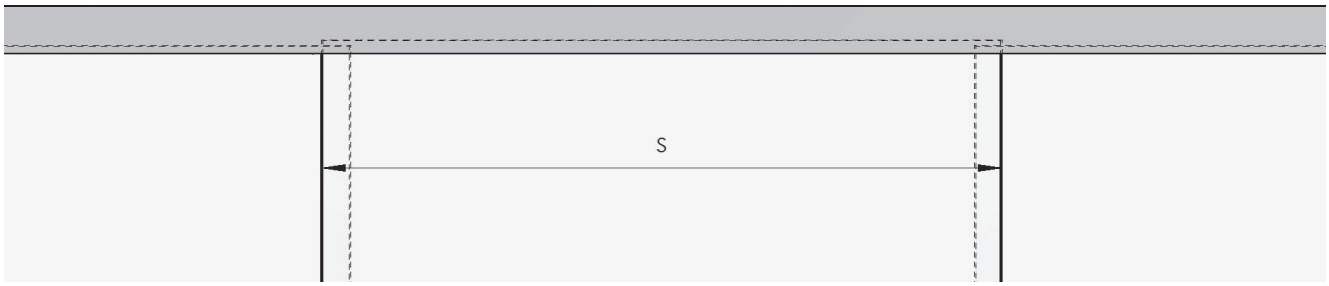

Components

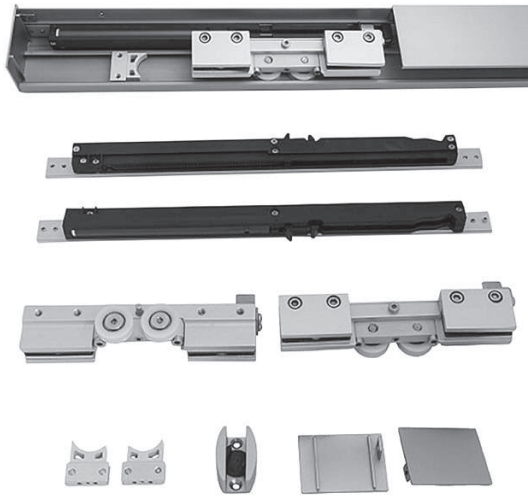

Quality	Finish	Effect	art.	glass t	glass max. (kg)	Soft Stop	(kg)	(kg)
ANODIZED ALUMINIUM	natural	Silver	GS-AL/P8108/N/E-3M	8-12	80	✓	30-60	60-80

Accessories

Quantity	1x	1x	2x	2x	2x	1x	2x3m

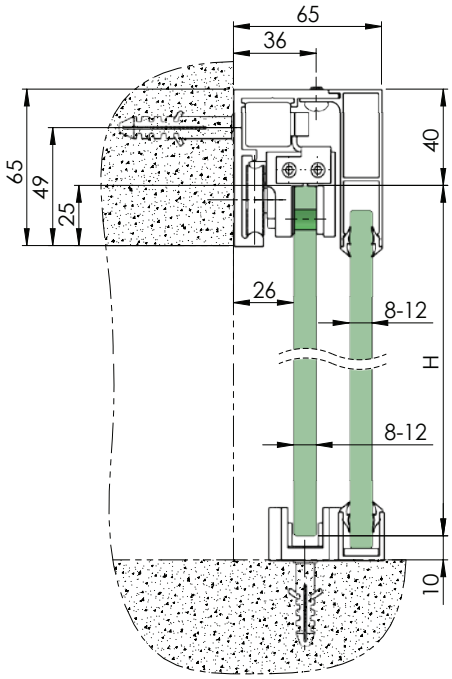

Glass preparation

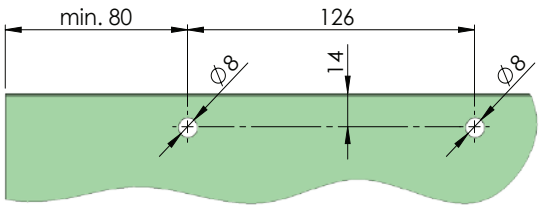

3000

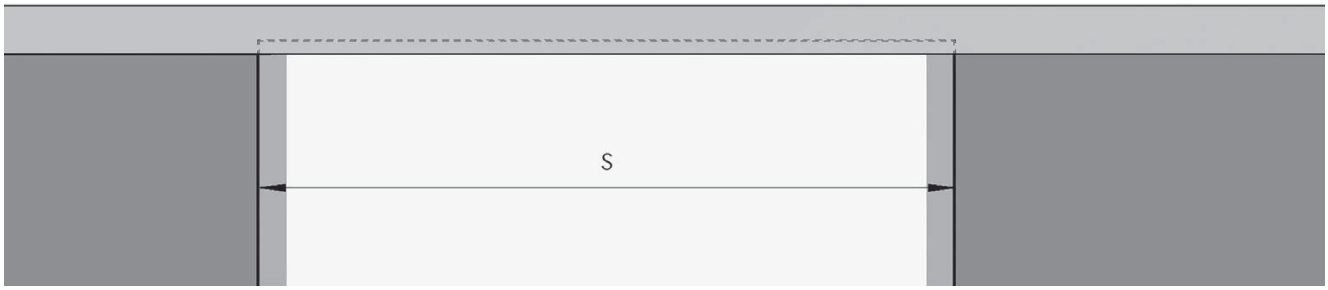

Components

Quality	Finish	art.	wood t	glass max. (kg)	Soft Stop
AISI304	satin	WS/P9101/S-set	30-40	80	-

wood

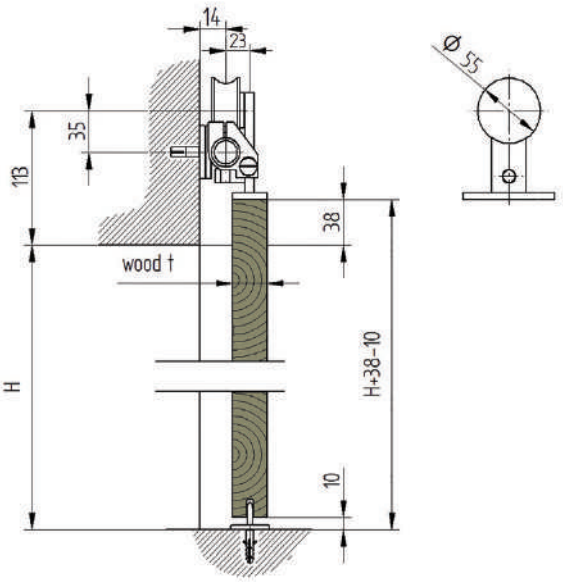

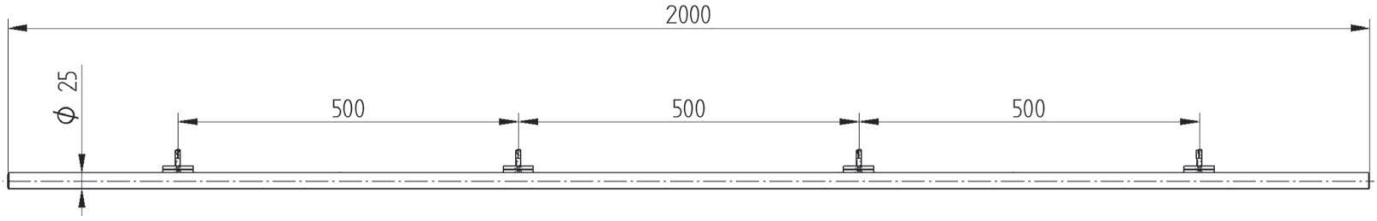

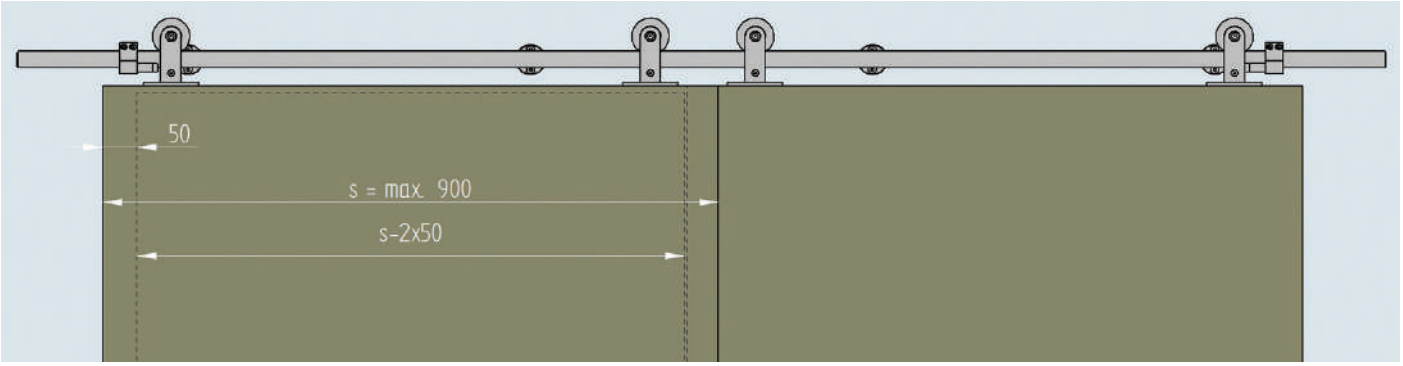

Components

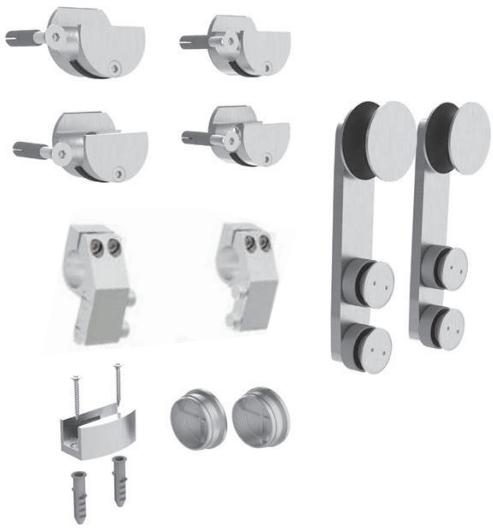

Quality	Finish	art.	glass t	glass max. (kg)	Soft Stop
AISI304	satin	GS-304/P9102/S-set	8-12	100	-

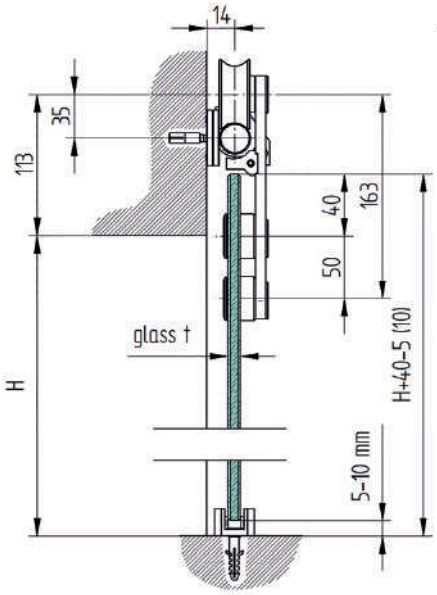

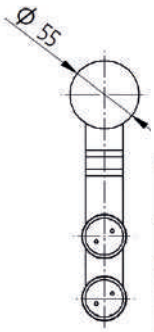

Glass preparation

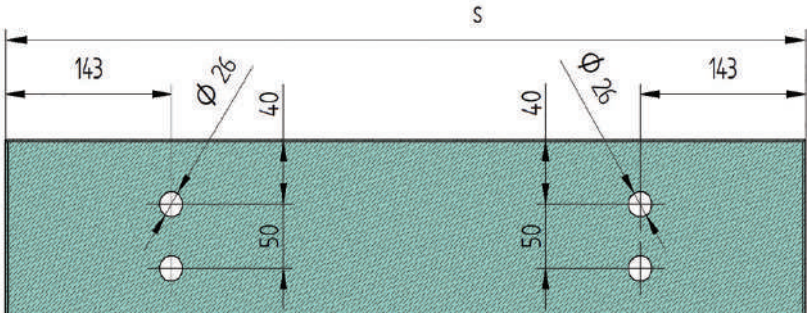

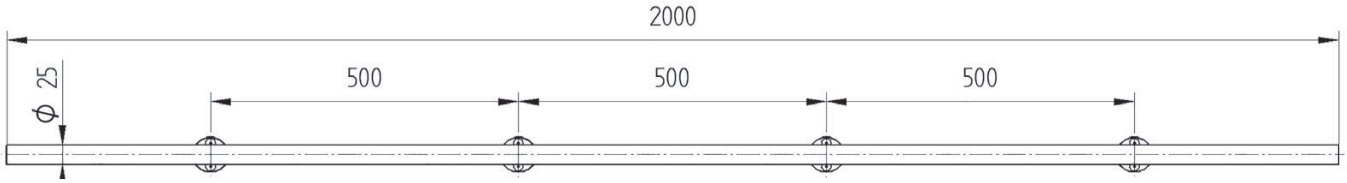

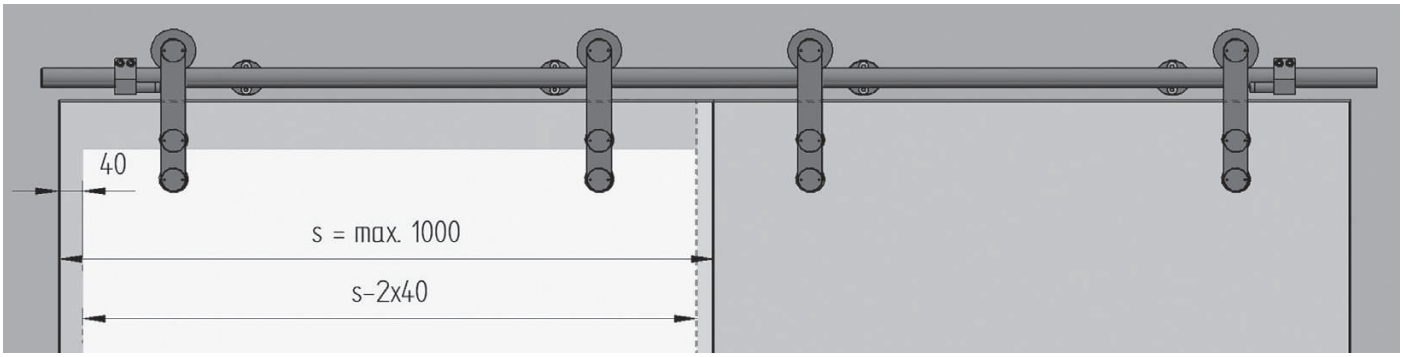

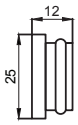

Quality	Finish	art.	compatibility
AISI304	satin	GS/P9100A16	A/25x2-2000

GS/P9100A6-L

GS/P9100A6-R

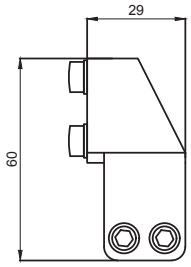

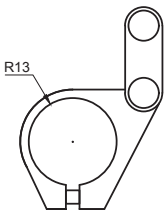

Quality	Finish	art.	compatibility
AISI304	satin	GS/P9100A6-L	A/25x2-2000
		GS/P9100A6-R	

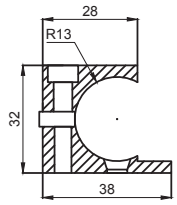

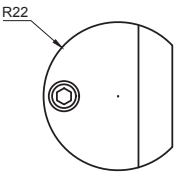

Quality	Finish	art.	compatibility
AISI304	satin	GS/P9100A1	A/25x2-2000

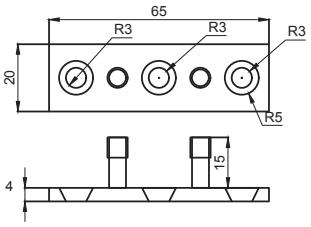

Quality	Finish	art.
AISI304	satin	WS/P9100-11

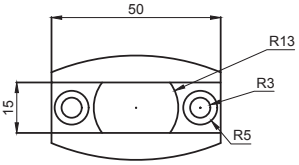

Quality	Finish	art.
AISI304	satin	GS/P9100A11S

Quality	Finish	art.	compatibility
AISI304	satin	GS/P9100-set	GS/P8000

Quality	Finish	art.	L	D	Soft Stop	compatibility
AISI304	satin	GS/P8000	2000	25	✓	GS/P9100A1A
		A/25x2-2000			-	WS/P9100-1-i

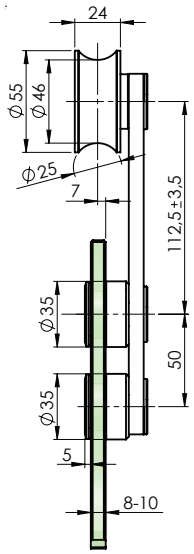

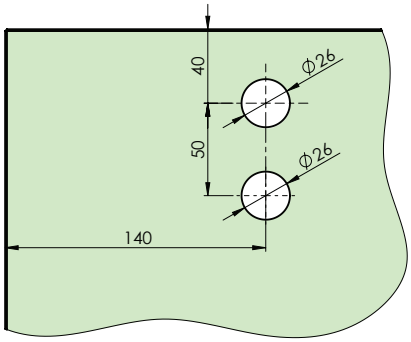

Quality	Finish	art.	glass t	glass max. (kg)
AISI304	satin	GS/P9100A1A	8-12	60

WS/P9100-1

WS/P9100-B

Quality	Finish	art.	wood max. (kg)
AISI304	satin	WS/P9100-1	60
		WS/P9100-B	

wood

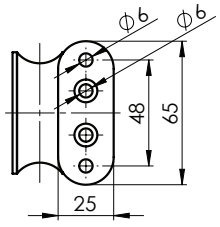

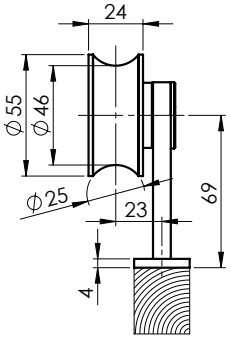

WS/P9100-1

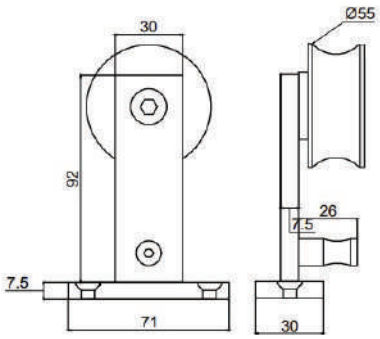

WS/P9100-B

Components

Quality	Finish	art.	glass t	glass max. (kg)	L (mm)	STOP
AISI304	satin	GS-304/P9201/S-set	10	80	3000	

Glass preparation

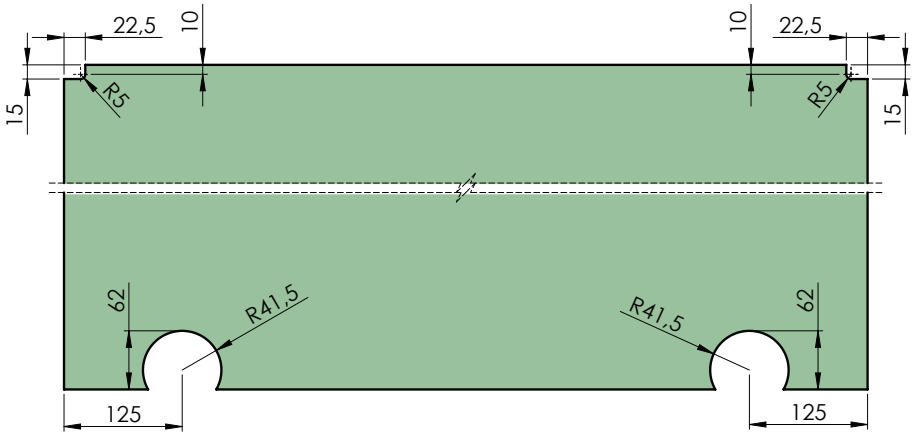

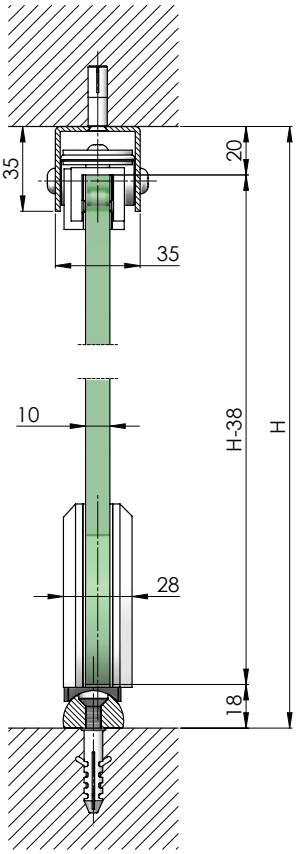

Components

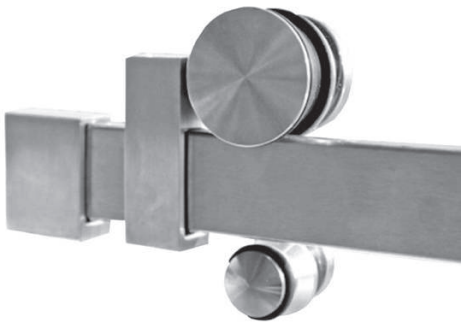

Quality	Finish	art.	glass t	glass max. (kg)	STOP	
AISI304	polish	GS-304/P9802/P/Cr	8-10	65	→	✓

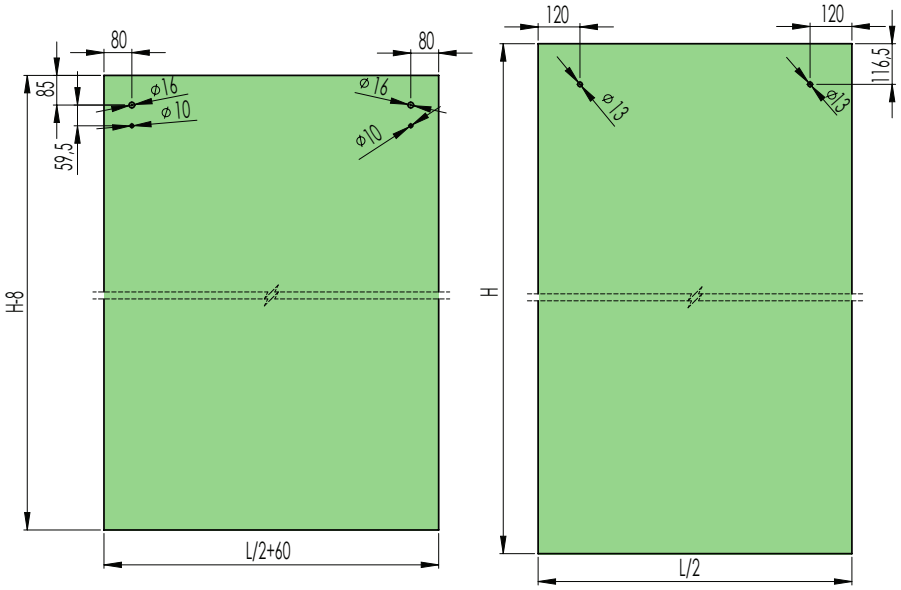

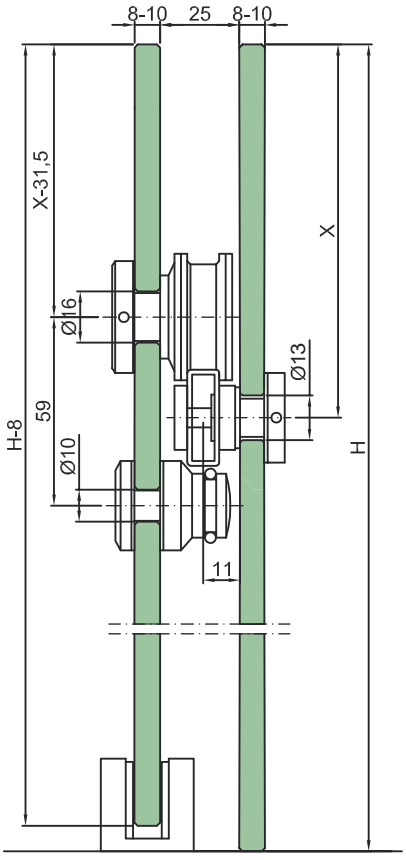

4 SHOWER CABINS

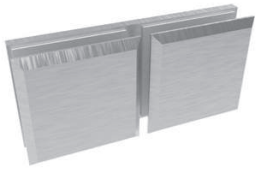

FIXED CLAMPS

STABILIZING BARS, CONNECTORS

KNOBS, HANDLES

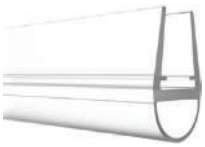

SEALS, THRESHOLD PROFILES

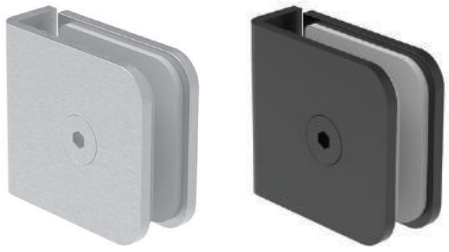

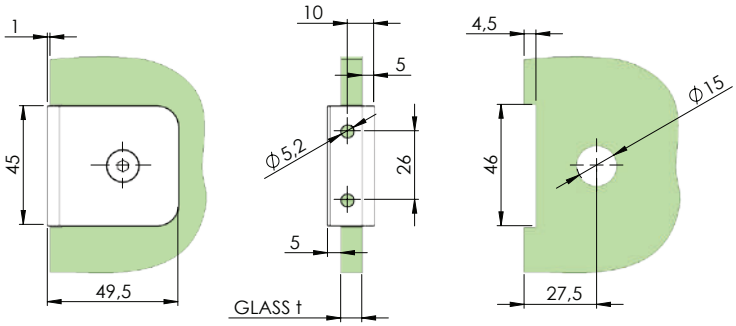

Quality	Finish	Effect	art.	glass t	b x h	mounting
AISI304	satin	Silver	GS-304/ZP-901/S	8-10	45x45	wall/glass
		black	GS-BLACK/ZP-901/S			
	polish	Silver	GS-304/ZP-901/P/Cr			

new

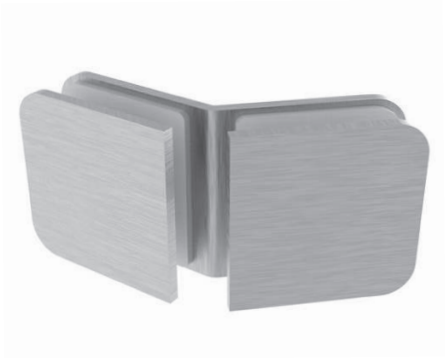

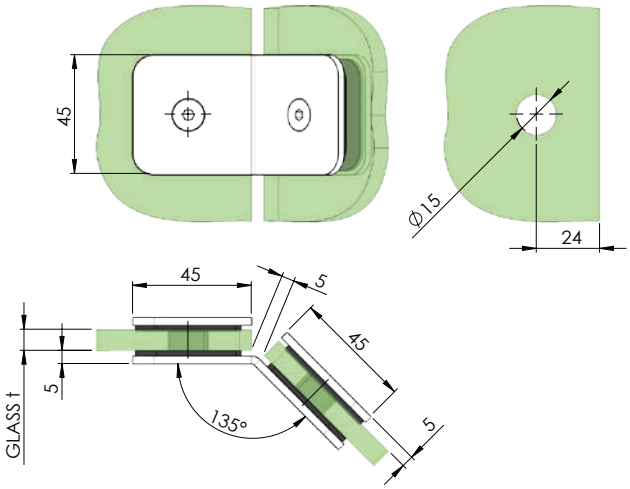

Quality	Finish	art.	glass t	b x h	mounting
AISI304	satin	GS-304/ZP-904/S	8-10	45x45	glass/ glass

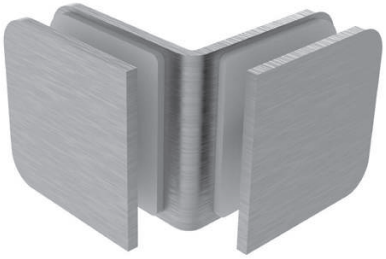

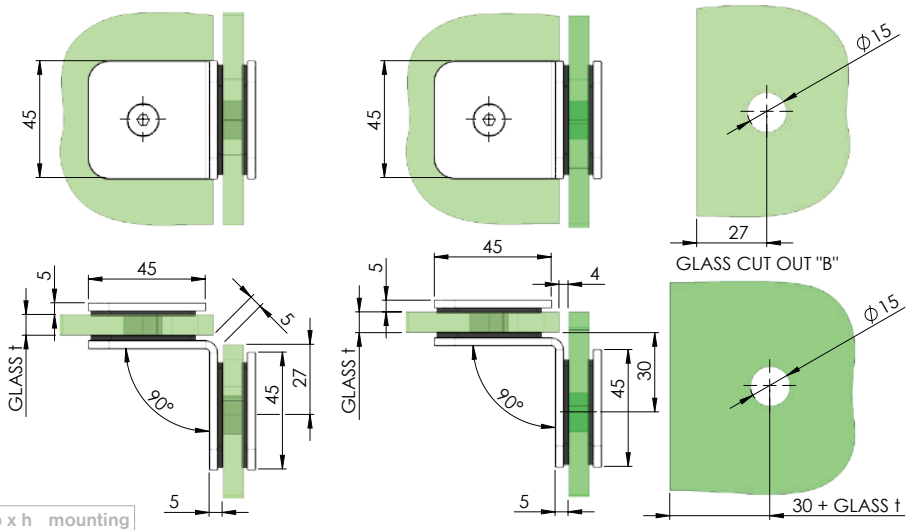

Quality	Finish	art.	glass t	b x h	mounting
AISI304	satin	GS-304/ZP-906/S	8-10	45x45	glass/ glass
	polish	GS-304/ZP-906/P/Cr			

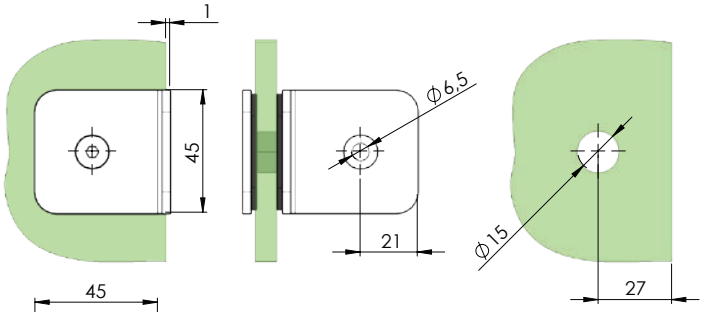

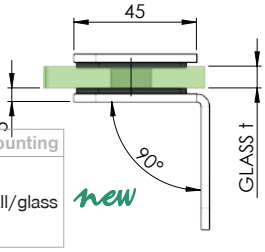

new

Quality	Finish	Effect	art.	glass t	b x h	mounting
AISI304	satin	Silver	GS-304/ZP-907/S	8-10	45x45	wall/glass
		black	GS-BLACK/ZP-907/S			
	polish	Silver	GS-304/ZP-907/P/Cr			

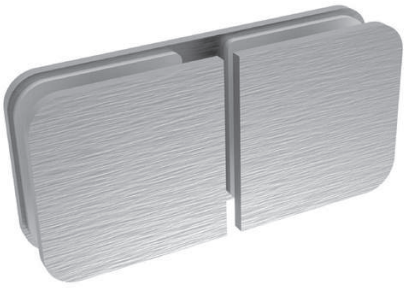

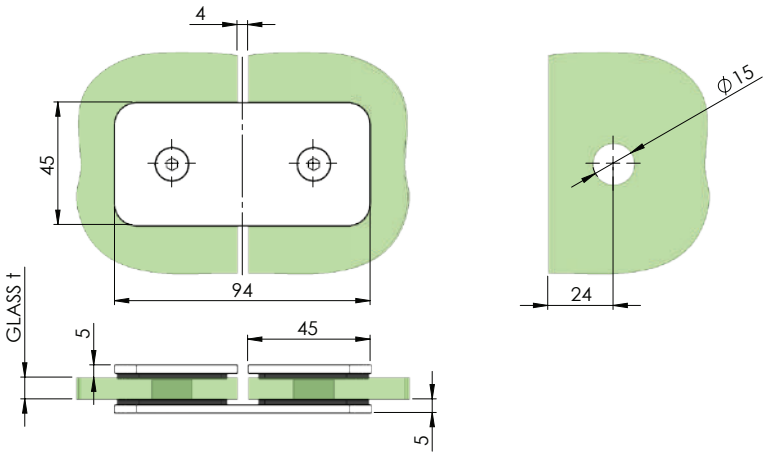

Quality	Finish	art.	glass t	b x h	mounting
AISI304	satin	GS-304/ZP-917/S	8-10	45x45	glass/ glass

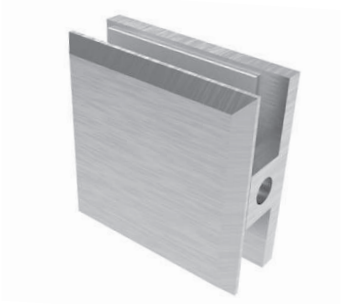

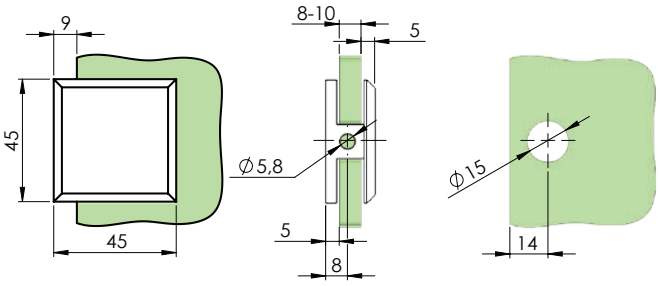

Quality	Finish	art.	glass t	b x h	mounting
ZAMAK	satin	GS-ZN/ZP-901/S	8-10	45x45	wall/ glass
	polish	GS-ZN/ZP-901/P/Cr			

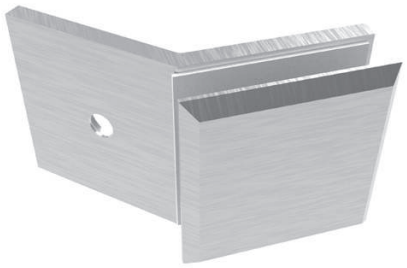

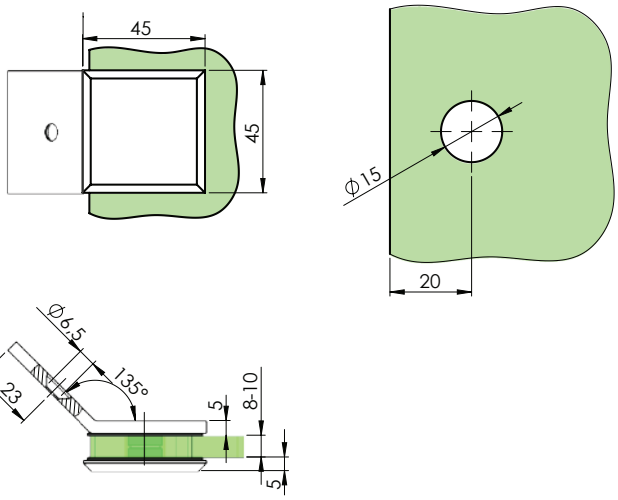

Quality	Finish	art.	glass t	b x h	mounting
ZAMAK	satin	GS-ZN/ZP-903/S	8-10	45x45	wall/ glass
	polish	GS-ZN/ZP-903/P/Cr			

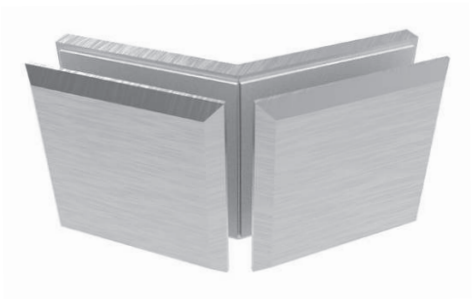

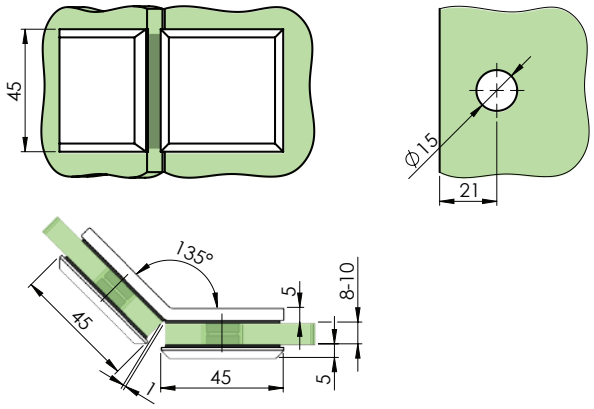

Quality	Finish	art.	glass t	b x h	mounting
ZAMAK	satin	GS-ZN/ZP-904/S	8-10	45x45	glass/ glass
	polish	GS-ZN/ZP-904/P/Cr			

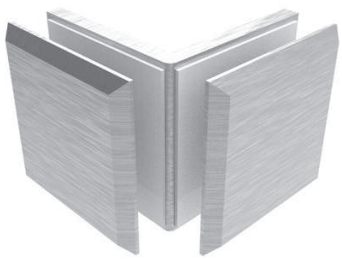

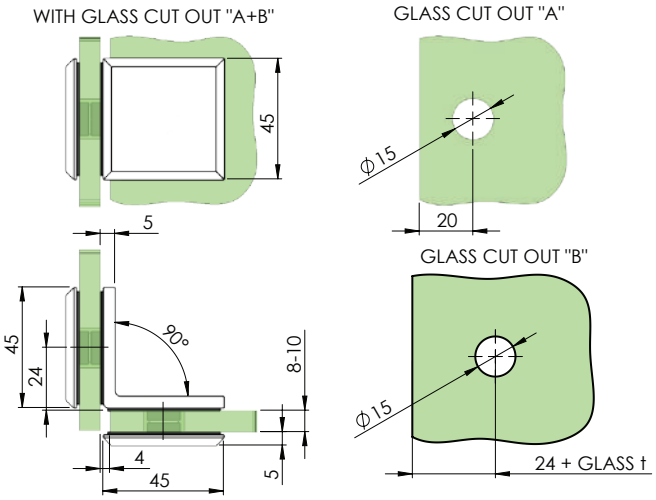

Quality	Finish	art.	glass t	b x h	mounting
ZAMAK	satin	GS-ZN/ZP-906/S	8-10	45x45	glass/ glass
	polish	GS-ZN/ZP-906/P/Cr			

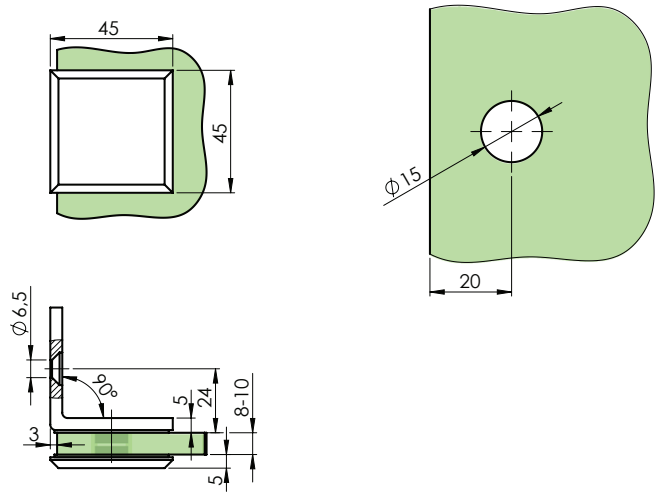

Quality	Finish	art.	glass t	b x h	mounting
ZAMAK	satin	GS-ZN/ZP-907/S	8-10	45x45	wall/ glass
	polish	GS-ZN/ZP-907/P/Cr			

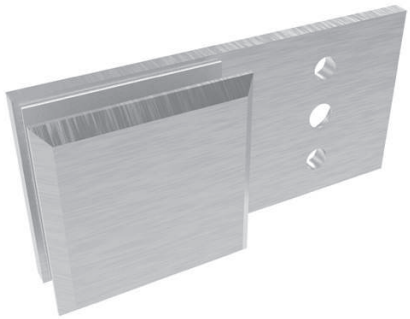

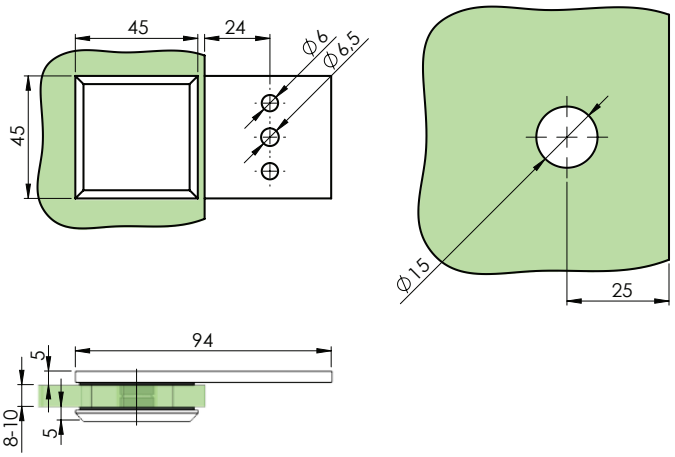

Quality	Finish	art.	glass t	b x h	mounting
ZAMAK	satin	GS-ZN/ZP-909/S	8-10	45x45	wall/ glass
	polish	GS-ZN/ZP-909/P/Cr			

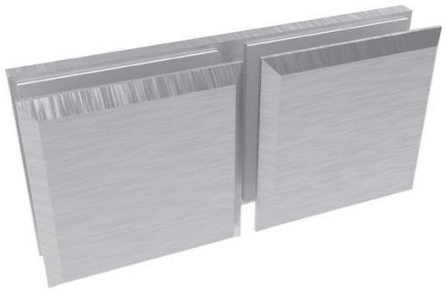

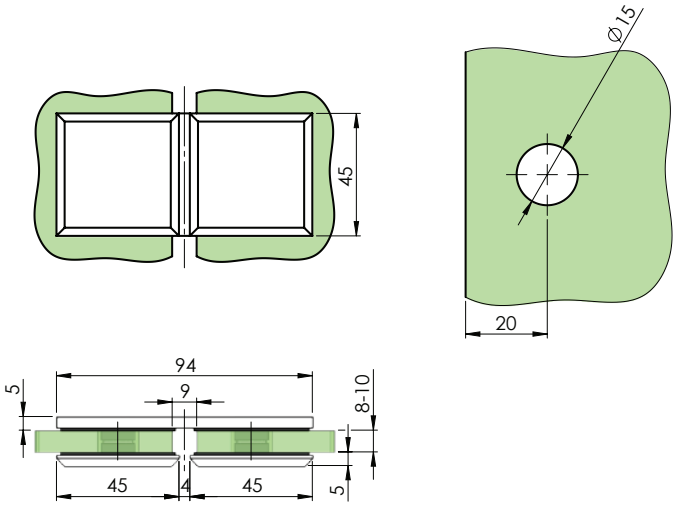

Quality	Finish	art.	glass t	b x h	mounting
ZAMAK	satin	GS-ZN/ZP-917/S	8-10	45x45	glass/ glass
	polish	GS-ZN/ZP-917/P/Cr			

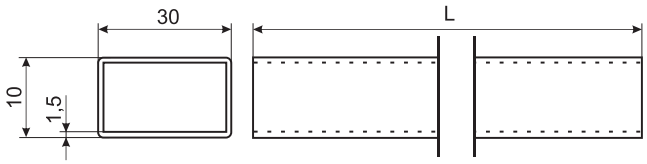

Quality	Finish	art.	L
AISI304	polish	A/30x10x1,5-2000-L	2000
ALUMINIUM		AL/30x10x1,5-2000-L	

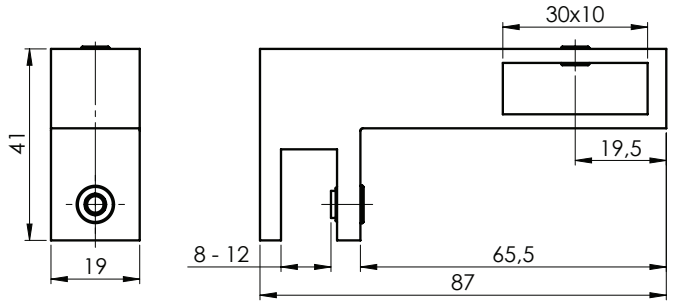

Quality	Finish	art.
AISI304	polish	GS-304/ZP-221/P/Cr

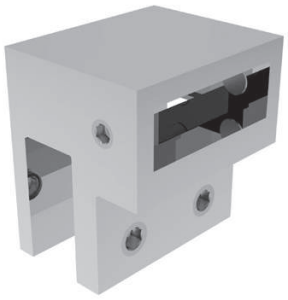

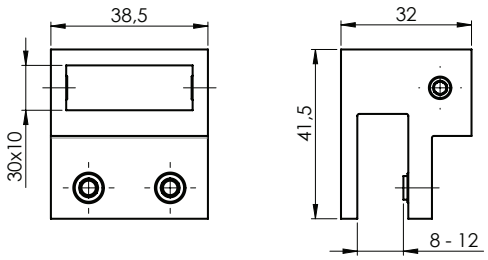

Quality	Finish	art.
AISI304	polish	GS-304/ZP-220/P/Cr

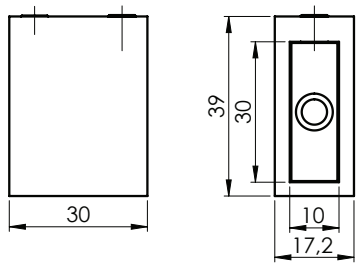

Quality	Finish	art.
AISI304	polish	GS-304/ZP-222/P/Cr

Quality	Finish	art.
AISI304	polish	GS-304/ZP-223/P/Cr

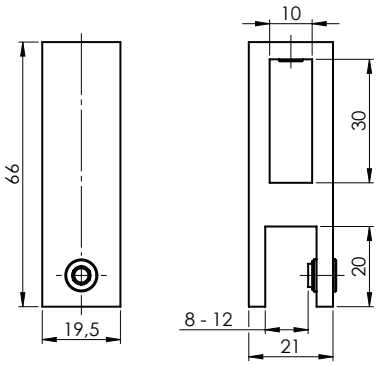

Quality	Finish	art.
AISI304	polish	GS-304/ZP-224/P/Cr

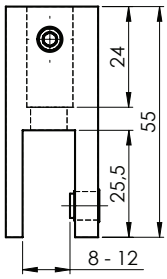

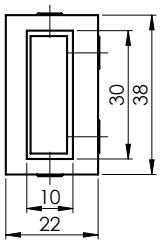

Quality	Finish	art.
AISI304	polish	GS-304/ZP-225/P/Cr

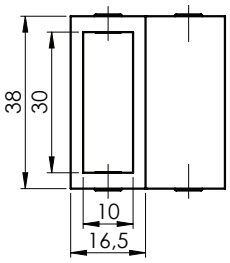

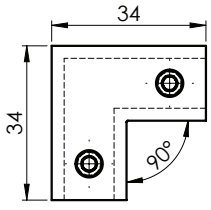

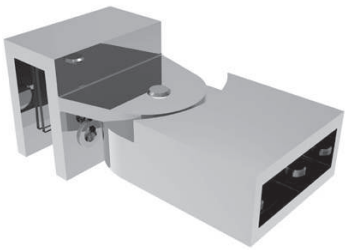

Quality	Finish	art.
AISI304	polish	GS-304/ZP-226/P/Cr

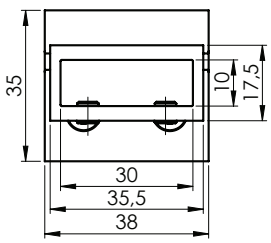

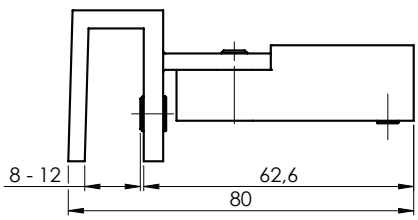

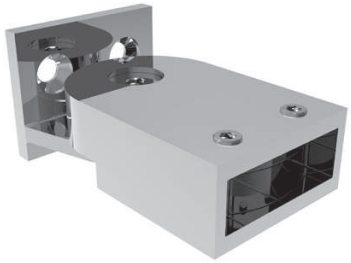

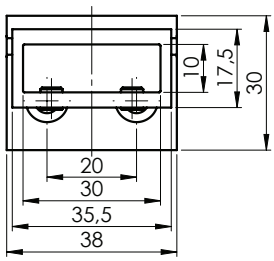

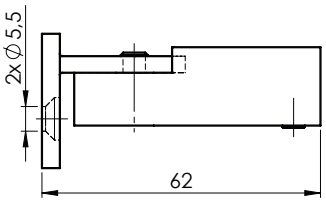

AISI304	polish	GS-304/ZP-227/P/Cr

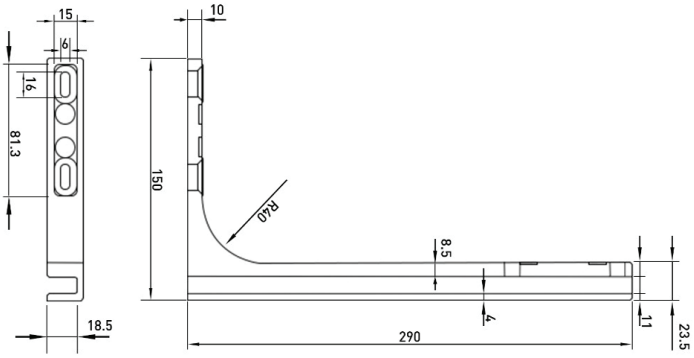

Quality	Finish	art.	glass t
AISI304	polish	GS-304/ZP-900L/P/Cr	8-12
		GS-304/ZP-900R/P/Cr	

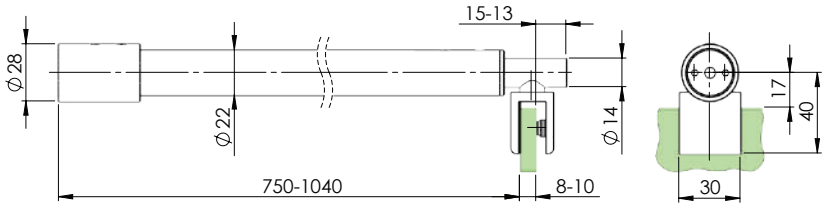

Quality	Finish	art.	glass t	mounting	L
AISI304	satin	GS-304/ZP-925/S	8-10	wall/ glass	750-1050
	polish	GS-304/ZP-925/P/Cr			

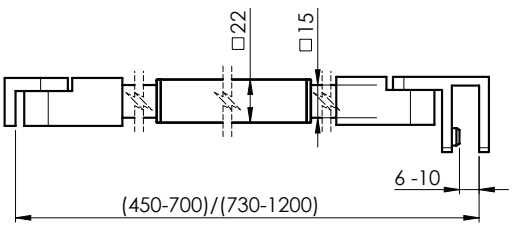

Quality	Finish	Effect	art.	glass t	mounting	L
AISI304	satin	black	GS-BLACK/ZP-926/S	6-10	wall/ glass	450-1200
		Silver	GS-304/ZP-926/S			
	polish		GS-304/ZP-926/P/Cr			

new

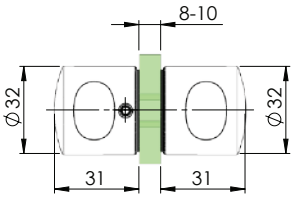

Quality	Finish	art.
AISI304	satin	GS-304/M-924/S
	polish	GS-304/M-924/P/Cr

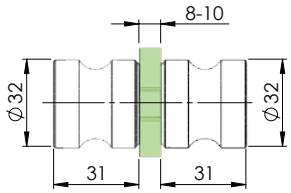

Quality	Finish	art.
AISI304	satin	GS-304/M-926/S
	polish	GS-304/M-926/P/Cr

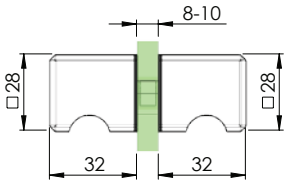

Quality	Finish	Effect	art.
AISI304	satin	black	GS-BLACK/M-929/S/E
	polish	Silver	GS-304/M-929/P/Cr

new

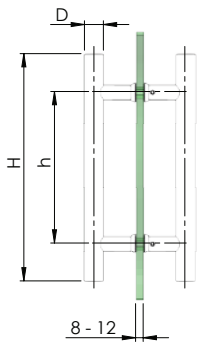

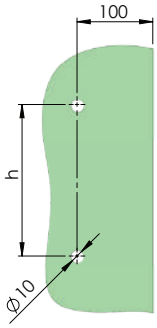

Quality	Finish	art.	D	H	h
AISI304	polish	GS-304/M1-25-300/P/Cr	25	300	200

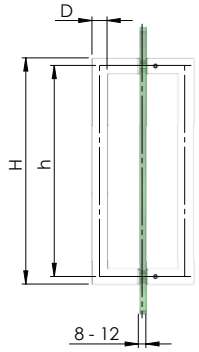

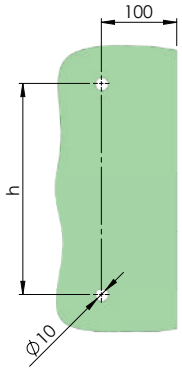

Quality	Finish	art.	D	H	h
AISI304	polish	GS-304/M3-20-300/P/Cr	20	320	300

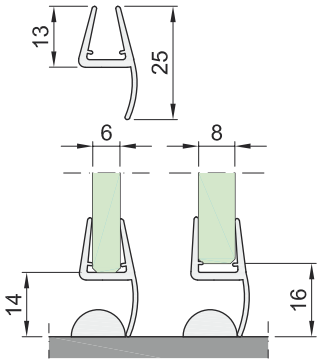

Quality	Finish	art.	glass t	L
PVC	transparent	GS-PVC/D-T1-8/N/T	6-8	2500

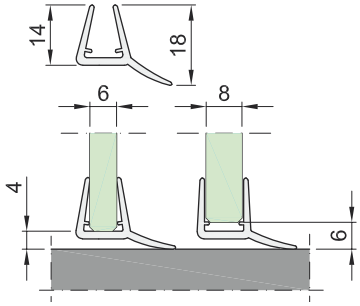

Quality	Finish	art.	glass t	L
PVC	transparent	GS-PVC/D-T3-8	6-8	2500

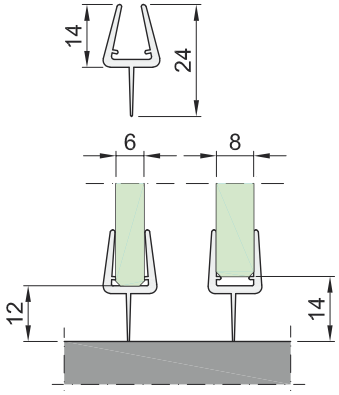

Quality	Finish	art.	glass t	L
PVC	transparent	GS-PVC/D-T6-8/N/T	6-8	2500

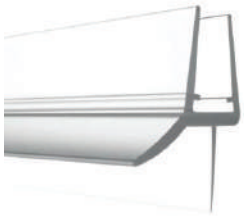

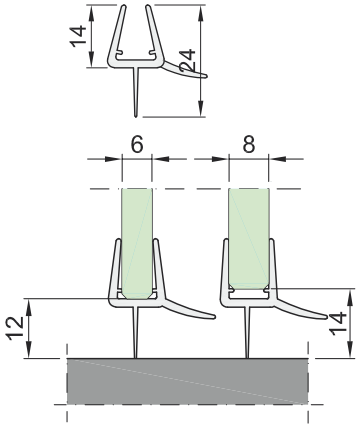

Quality	Finish	art.	glass t	L
PVC	transparent	GS-PVC/D-T14-8	6-8	2500

new

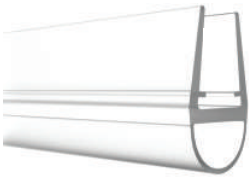

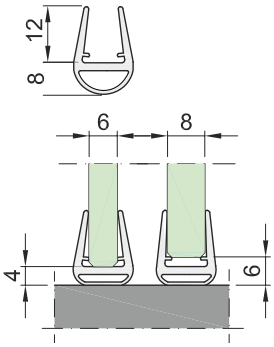

Quality	Finish	art.	glass t	L
PVC	transparent	GS-PVC/D-T10-8	6-8	2500

GS-PVC/D-T101-8

GS-PVC/D-T101-8-180

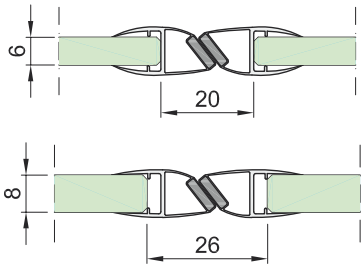

Quality	Finish	art.	glass t	L
PVC	transparent	GS-PVC/D-T101-8	6-8	2500
		GS-PVC/D-T101-8-180		

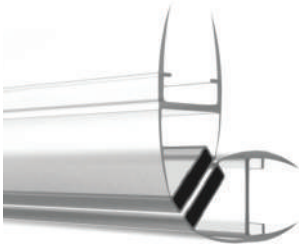

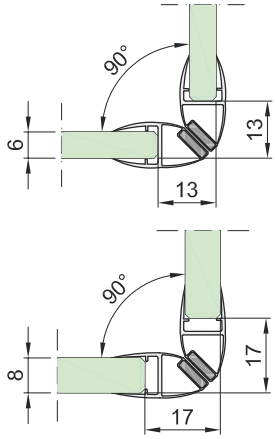

Quality	Finish	art.	glass t	L
PVC	transparent	GS-PVC/D-T103-8/N/T	6-8	2500

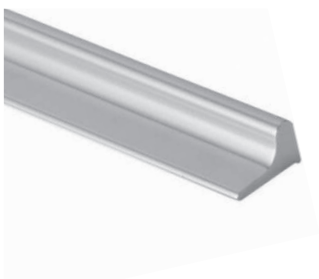

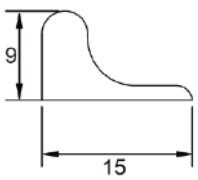

Quality	Finish	Effect	art.	L
ANODIZED ALUMINIUM	natural	Silver	GS-AL/P	2000

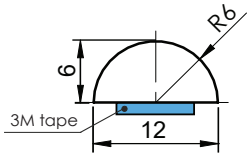

Quality	Finish	art.	L
PVC	transparent	GS-PVC/P	2000

5 SWING DOORS

SPRING HINGES

HYDRAULIC HINGES

LIFT HINGES

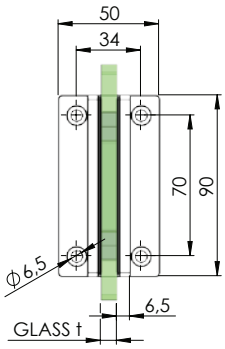

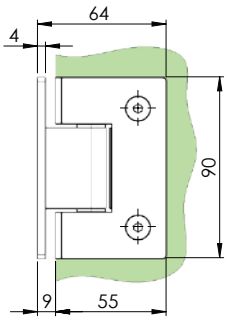

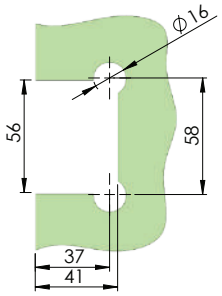

Quality	Finish	Effect	art.	glass t	Gmax (kg)/2pcs	STOP	door width	±15°
AISI304	satin	Silver	GS-304/D-B-990-1/S-B	8-10	45	±90°, 0°	850	±15°
		black	GS-BLACK/D-B-990-1/S-B					
	polish	Silver	GS-304/D-B-990-1/P/Cr-B					

new

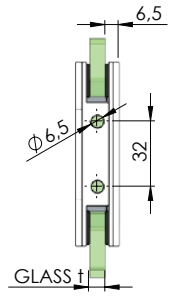

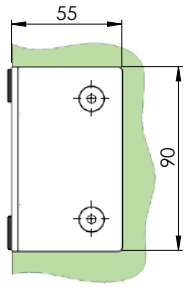

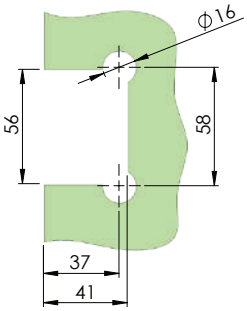

Quality	Finish	art.	glass t	Gmax (kg)/2pcs	STOP	door width	±15°
AISI304	satin	GS-304/D-B-990-5/S-B	8-10	45	±90°, 0°	850	±15°
	polish	GS-304/D-B-990-5/P/Cr-B					

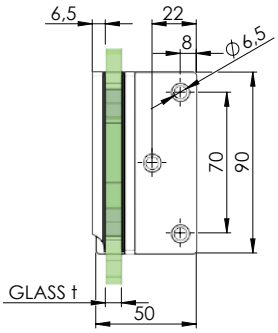

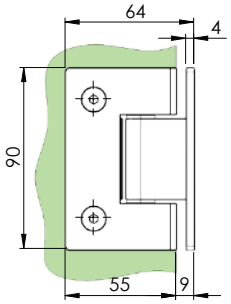

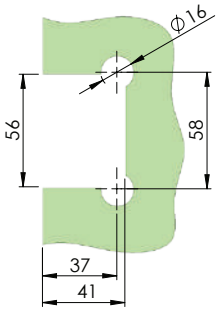

GS-304/D-B-990...

GS-BLACK/D-B-990...

Quality	Finish	Effect	art.	glass t	Gmax (kg)/2pcs	STOP	door width	±15°
AISI304	satin	Silver	GS-304/D-B-990-6/S-B	8-10	45	±90°, 0°	850	±15°
		black	GS-BLACK/D-B-990-6/S-B					
	polish	Silver	GS-304/D-B-990-6/P/Cr-B					

new

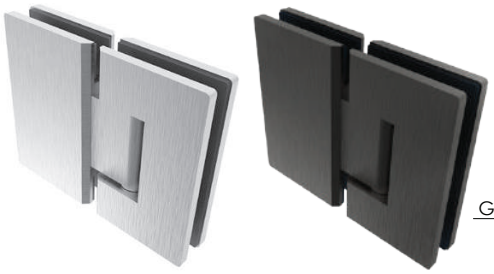

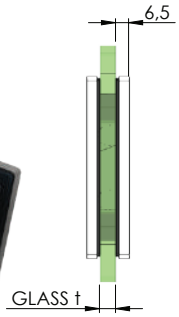

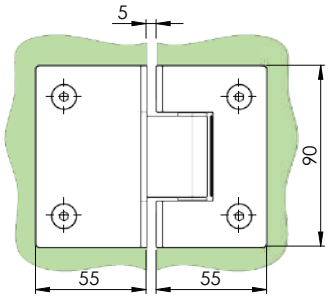

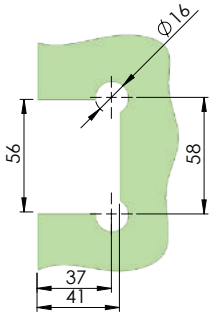

Quality	Finish	Effect	art.	glass t	Gmax (kg)/2pcs	STOP	door width	
AISI304	satin	Silver	GS-304/D-B-990-2/S-B	8-10	45	±90°, 0°	850	±15°
		black	GS-BLACK/D-B-990-2/S-B					
	polish	Silver	GS-304/D-B-990-2/P/Cr-B					

new

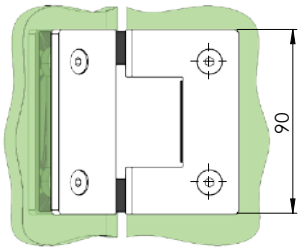

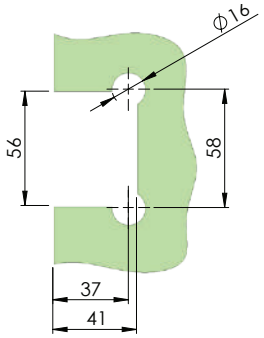

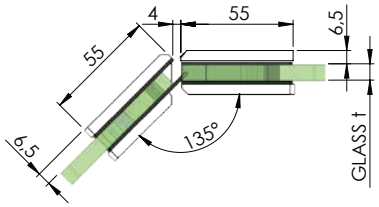

Quality	Finish	art.	glass t	Gmax (kg)/2pcs	STOP	door width	
AISI304	satin	GS-304/D-B-990-3/S-B	8-10	45	±90°, 0°	850	±15°
	polish	GS-304/D-B-990-3/P/Cr-B					

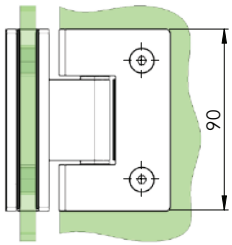

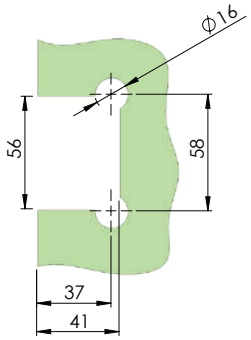

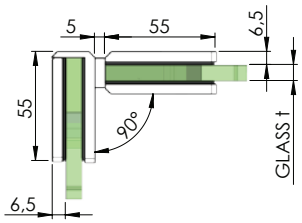

Quality	Finish	art.	glass t	Gmax (kg)/2pcs	STOP	door width	
AISI304	satin	GS-304/D-B-990-4/S-B	8-10	45	±90°, 0°	850	±15°
	polish	GS-304/D-B-990-4/P/Cr-B					

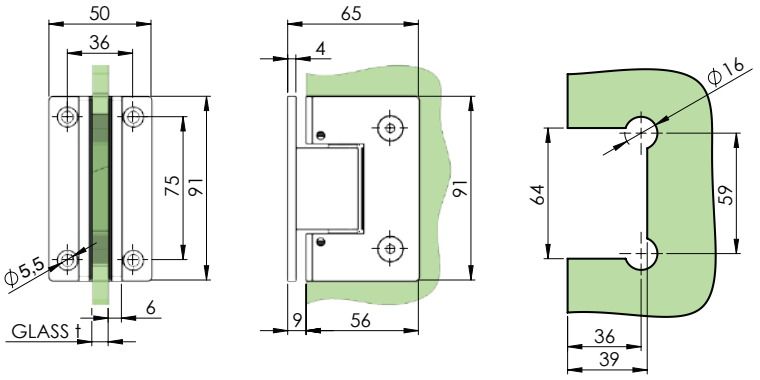

Quality	Finish	art.	glass t	Gmax (kg)/2pcs	STOP	door width	closing position alignment		
Brass	satin	GS-MS/D-B-980-1/S-B	8-12	45	±90°, 0°	950	±20°	±15°	✓
	polish	GS-MS/D-B-980-1/P/Cr-B							

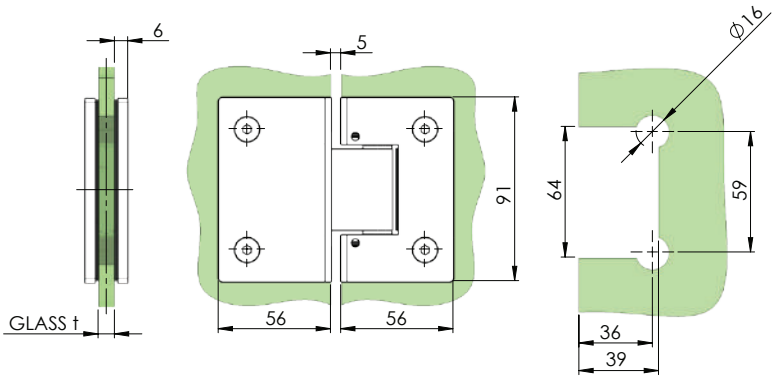

Quality	Finish	art.	glass t	Gmax (kg)/2pcs	STOP	door width	closing position alignment		
Brass	satin	GS-MS/D-B-980-2/S-B	8-12	45	±90°, 0°	950	±20°	±15°	✓
	polish	GS-MS/D-B-980-2/P/Cr-B							

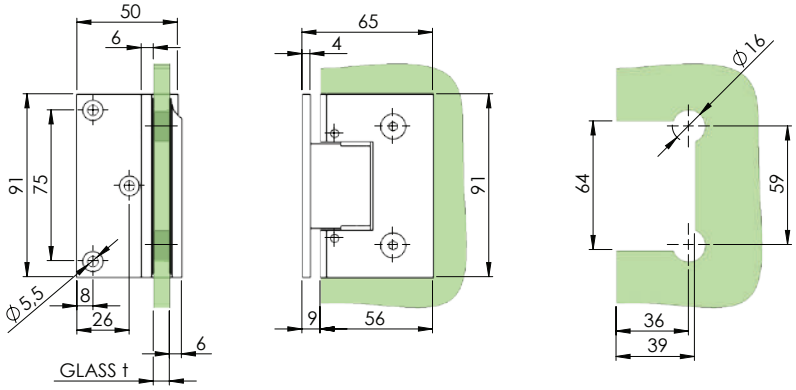

Quality	Finish	art.	glass t	Gmax (kg)/2pcs	STOP	door width	closing position alignment		
Brass	satin	GS-MS/D-B-980-6/S-B	8-12	45	±90°, 0°	950	±20°	±15°	✓
	polish	GS-MS/D-B-980-6/P/Cr-B							

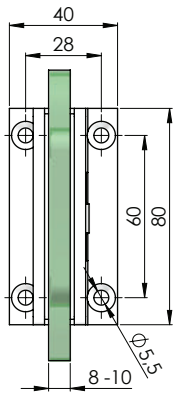

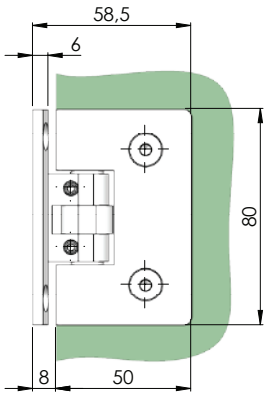

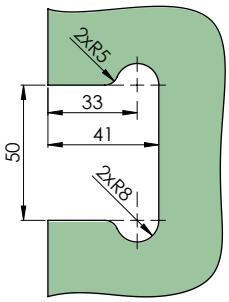

Quality	Finish	art.	Gmax (kg)/2pcs	STOP	door width	alignment	
Brass	satin	GS-MS/D-B-1000-1/S	45	±90°, 0°	950	0°-180°	±25°	✓
	polish	GS-MS/D-B-1000-1/P/Cr						

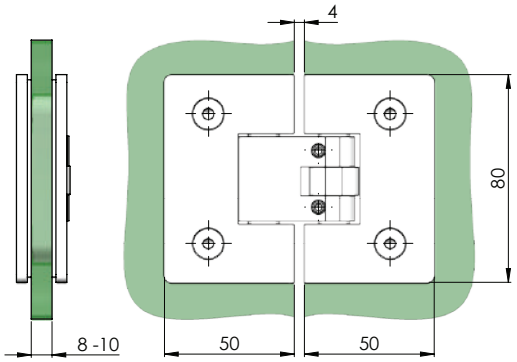

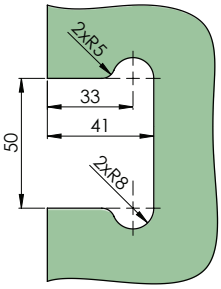

Quality	Finish	art.	Gmax (kg)/2pcs	STOP	door width	alignment	
Brass	satin	GS-MS/D-B-1000-2/S	45	±90°, 0°	950	0°-180°	±25°	✓
	polish	GS-MS/D-B-1000-2/P/Cr						

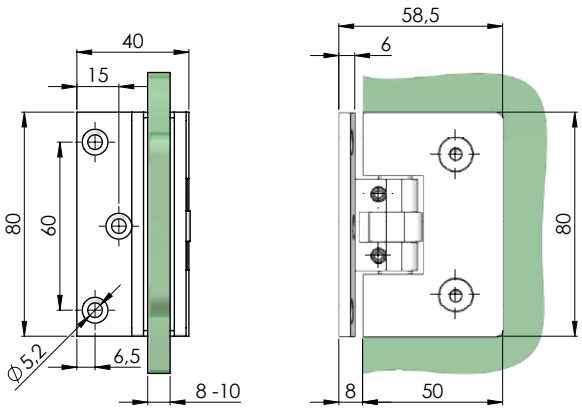

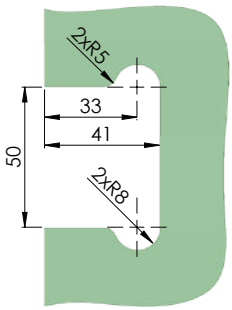

Quality	Finish	art.	Gmax (kg)/2pcs	STOP	door width	alignment	
Brass	satin	GS-MS/D-B-1000-6/S	45	±90°, 0°	950	0°-180°	±25°	✓
	polish	GS-MS/D-B-1000-6/P/Cr						

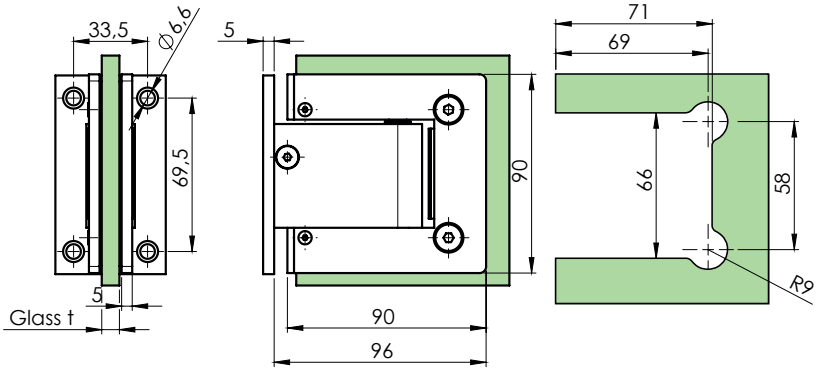

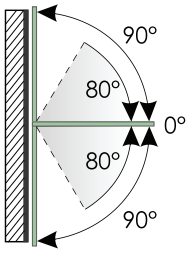

Quality	Finish	art.	glass t	Gmax (kg)/2pcs	STOP	door width
AISI304	satin	GS-304/D-B-991-10/S-B	8-12	50	±90°, 0°	800

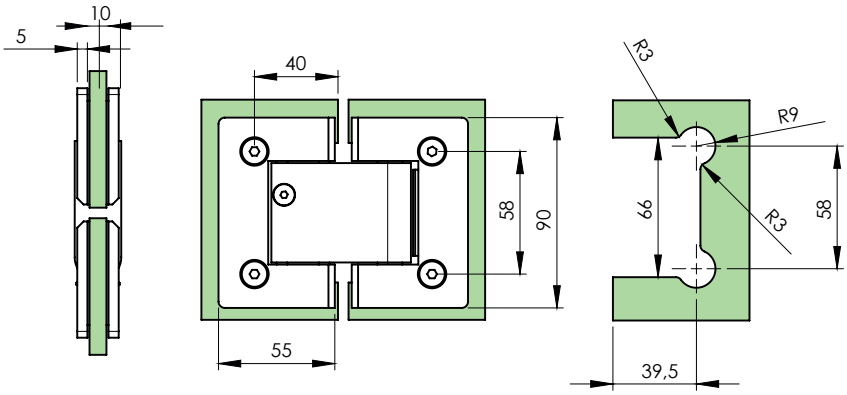

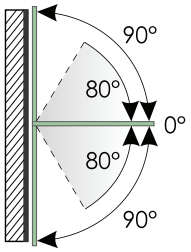

Quality	Finish	art.	glass t	Gmax (kg)/2pcs	STOP	door width
AISI304	satin	GS-304/D-B-991-20/S-B	8-12	50	±90°, 0°	800

GS...2L

GS...2R

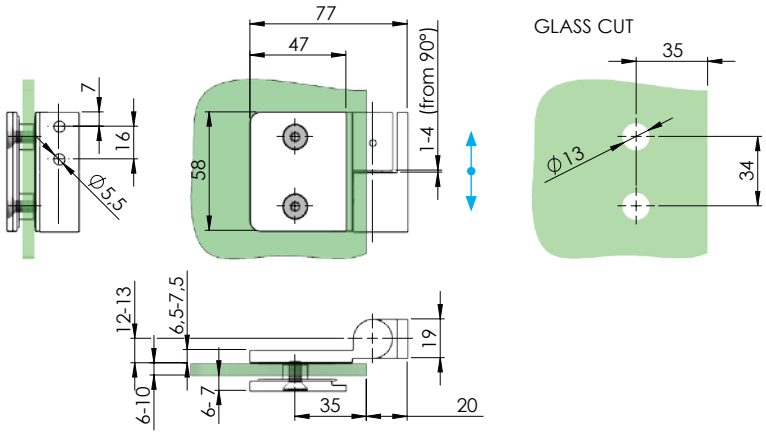

Quality	Finish	art.	G max. (kg)/2pcs	door width		LIFT
Brass	polish	GS-MS/D-B-900-2L/P/Cr-B	40	950	✓	0-5mm
		GS-MS/D-B-900-2R/P/Cr-B				

+

GS...4L

GS...4R

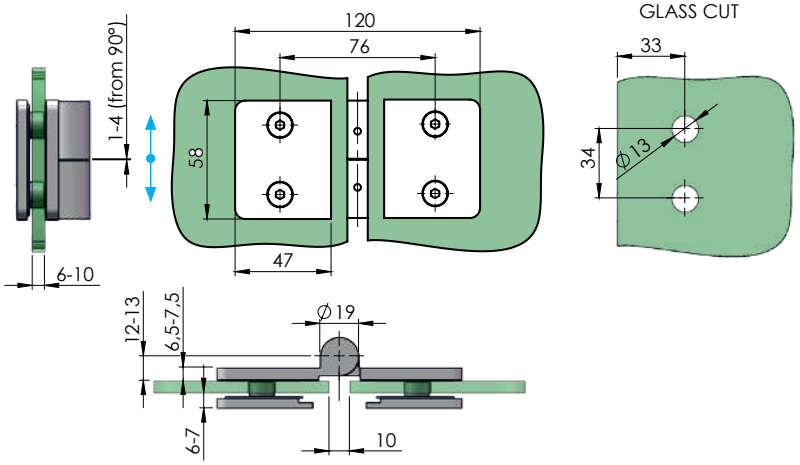

Quality	Finish	art.	G max. (kg)/2pcs	door width		LIFT
Brass	polish	GS-MS/D-B-900-4L/P/Cr-B	40	950	✓	0-5mm
		GS-MS/D-B-900-4R/P/Cr-B				

+ 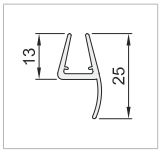

or 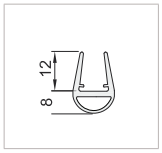

6 GLASS DOOR COMPONENTS

GLASS DOOR COMPONENTS

ADJUSTABLE GLASS DOOR ADAPTERS

PULL HANDLES

LOCKS

HINGES FOR GLASS DOORS

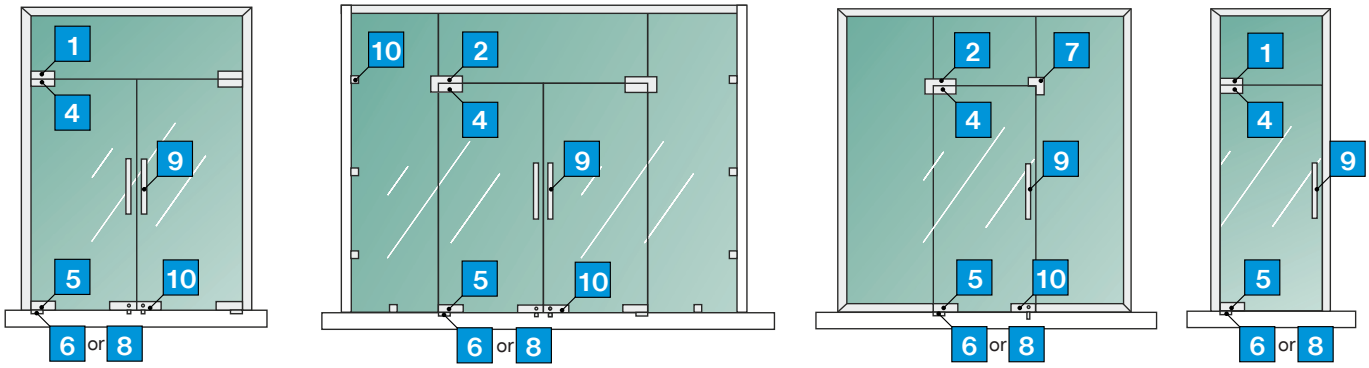

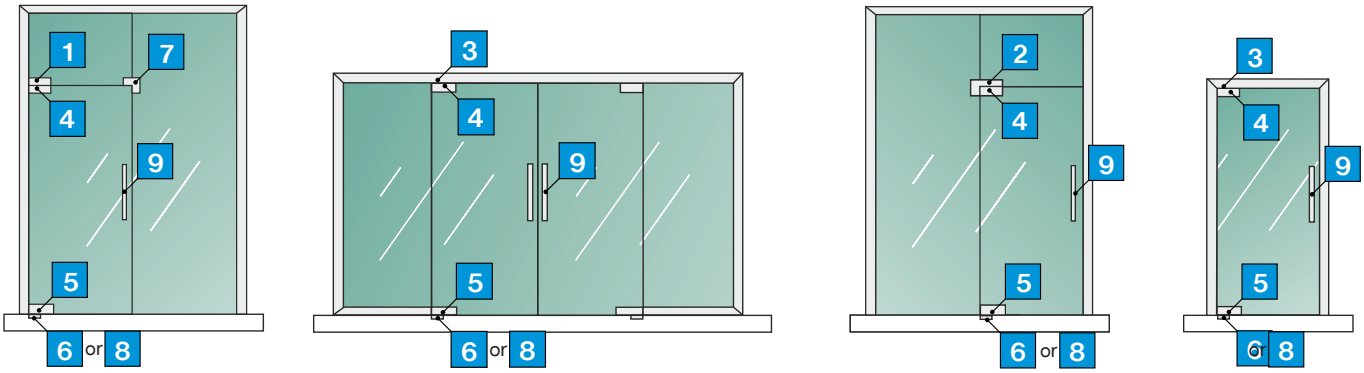

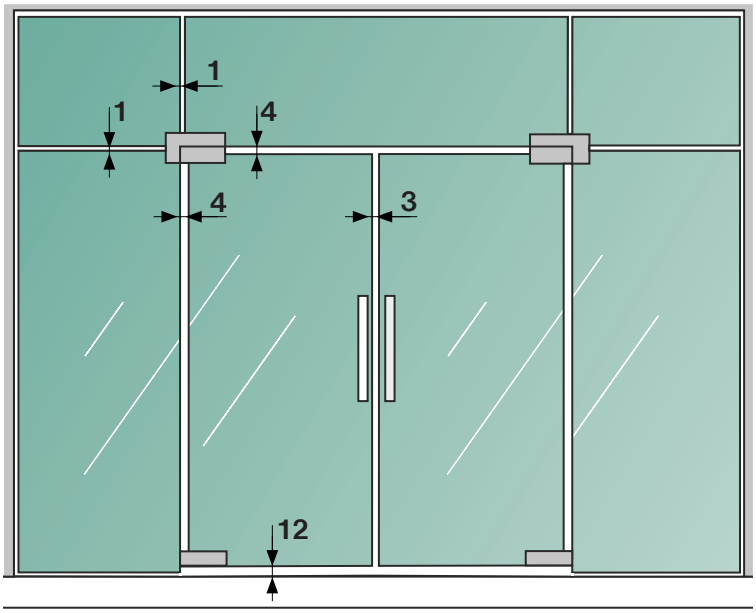

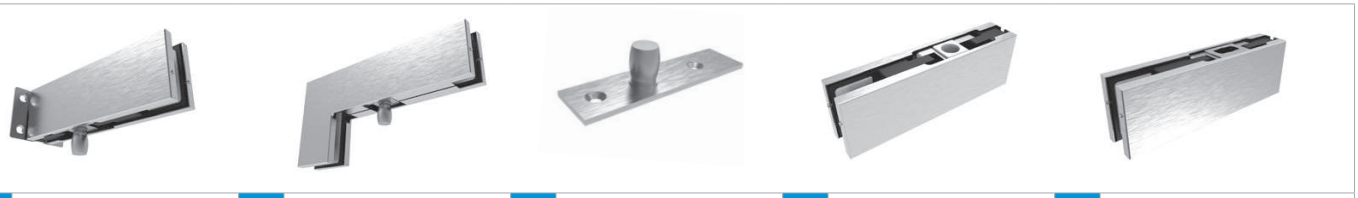

1	GS-304/ZP-811/S	2	GS-304/ZP-808/S	3	GS-304/ZP-802/S	4	GS-304/ZP-801/S	5	GS-304/ZP-800/S

6	GS-304/ZP-802/S-B	7	GS-304/ZP-809/S	8	GS-304/ZP-821/S GS-304/ZP-822/S-B	9	GS-304/M1...	10	GS-304/ZP-814/S

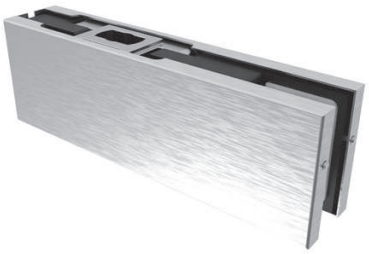

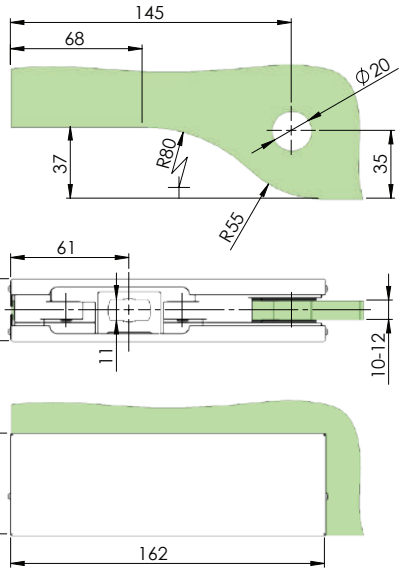

Quality	Finish	art.	
AISI304	satin	GS-304/ZP-800/S	5

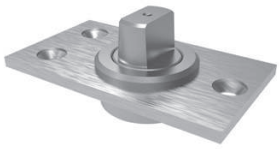

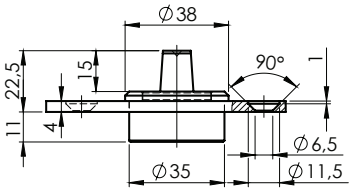

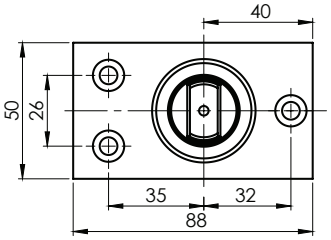

Quality	Finish	art.	
AISI304	satin	GS-304/ZP-802/S-B	6

GS-BLACK/ZP-801/S

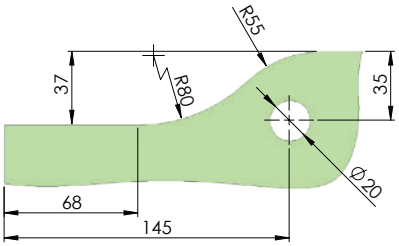

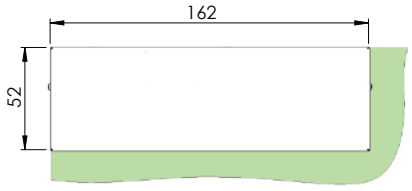

GS-304/ZP-801/S

Quality	Finish	Effect	art.	
AISI304	satin	Silver	GS-304/ZP-801/S	4
		Black	GS-BLACK/ZP-801/S	

new

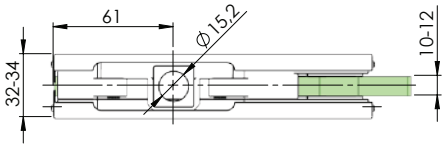

GS-BLACK/ZP-802/S

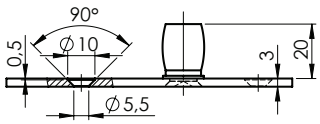

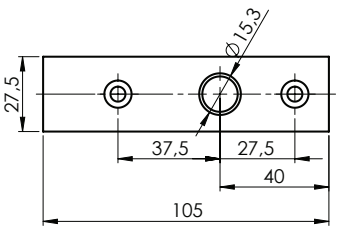

GS-304/ZP-802/S

Quality	Finish	Effect	art.	
AISI304	satin	Silver	GS-304/ZP-802/S	3
		Black	GS-BLACK/ZP-802/S	

new

Quality	Finish	art.	
AISI304	satin	GS-304/ZP-811/S	1

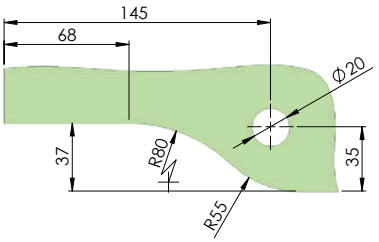

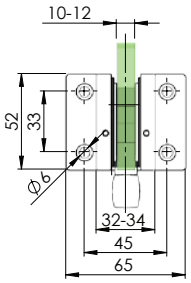

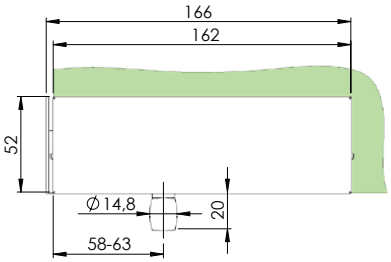

Quality	Finish	art.	
AISI304	satin	GS-304/ZP-808/S	2

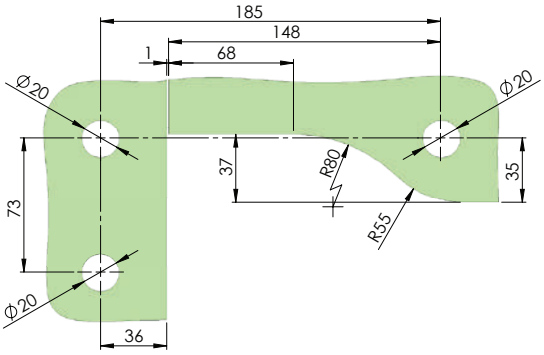

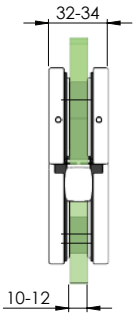

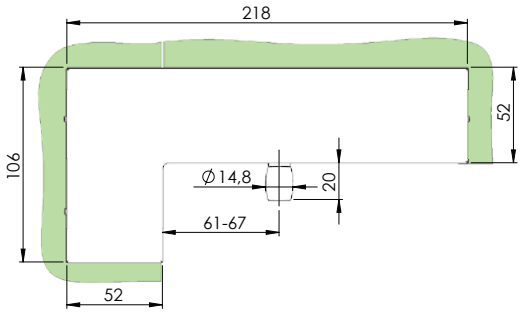

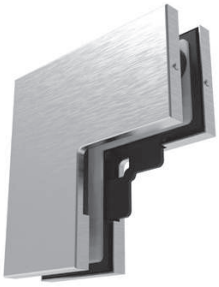

Quality	Finish	art.	
AISI304	satin	GS-304/ZP-809/S	7

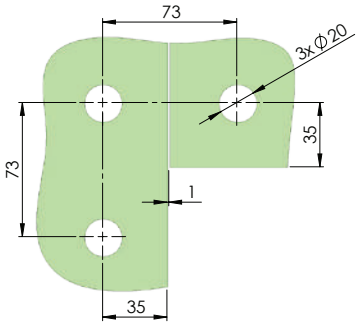

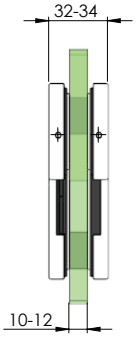

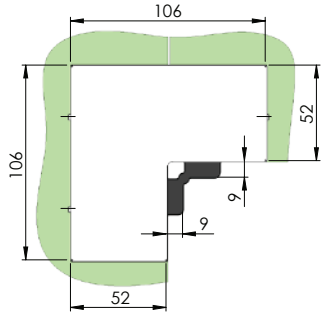

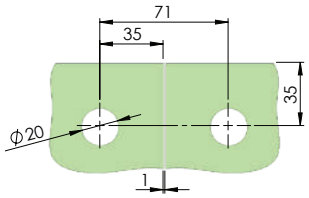

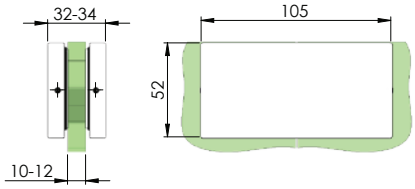

Quality	Finish	Effect	art.
AISI304	satin	Silver	GS-304/ZP-882/S
			GS-304/ZP-881/S

GS-BLACK/ZP-804/S-B

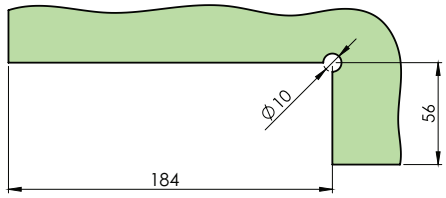

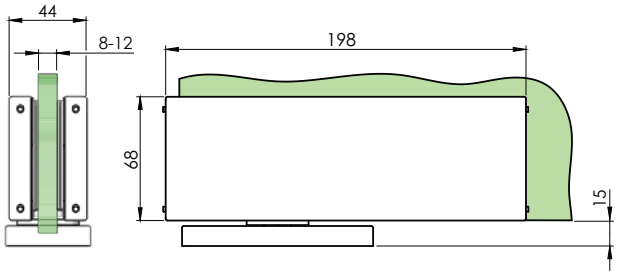

GS-304/ZP-804/S-C

Quality	Finish	Effect	art.	Gmax (kg)	L	h	a	b	STOP	
AISI304	satin	Silver	GS-304/ZP-804/S-C	100	198	7	187	68	±90°, 0°	✓
		Black	GS-BLACK/ZP-804/S-C							

new

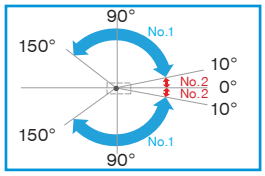

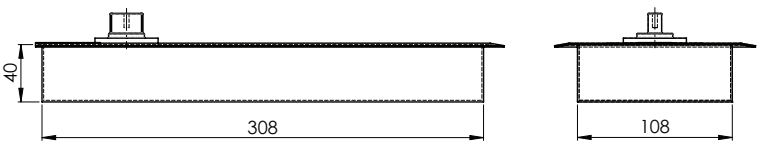

Quality	Finish	Effect	art.	Gmax (kg)	STOP	
AISI304	satin	Silver	GS-304/ZP-822/S-B	150	±90°, 0°	✓

8

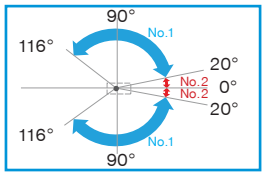

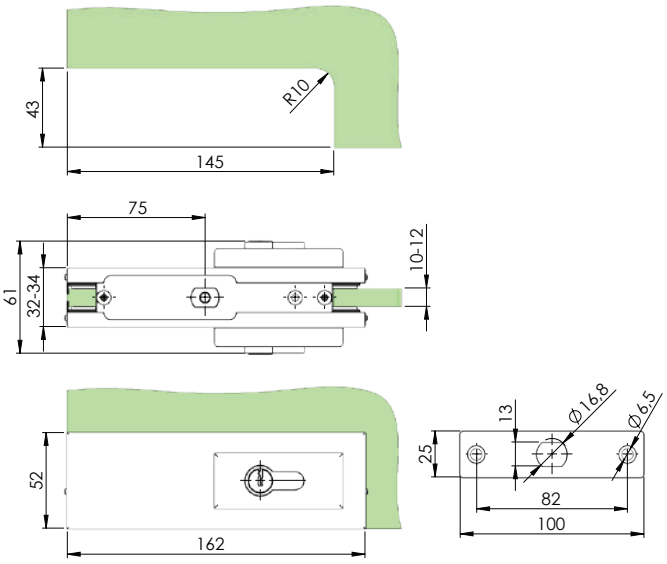

Quality	Finish	art.	
AISI304	satin	GS-304/ZP-814/S	10

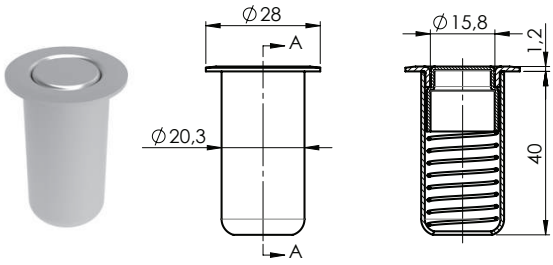

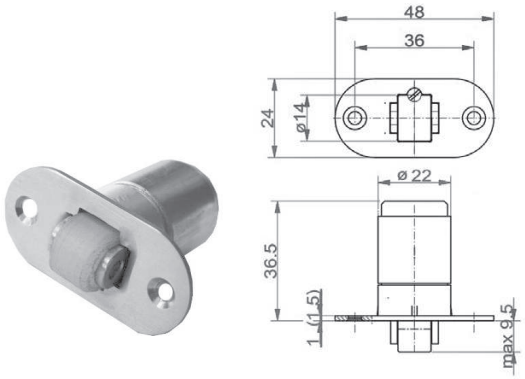

Quality	Finish	art.
AISI304	satin	GS-304/ZP-815/S

Quality	Finish	art.
AISI304	satin	GS-304/ZP-820/S

GLASS THICKNESS	DOOR HEIGHT (mm)									
DOOR WIDTH	1500	1600	1700	1800	1900	2000	2100	2200	2300	2500
500	-	6	6	8	8	8	8	10	10	12
600	-	6	6	8	8	8	10	10	12	12
700	-	6	6	8	8	8	10	10	12	12
800	-	6	8	8	8	10	10	12	12	12
900	-	6	8	8	8	10	10	12	12	12
1000	-	8	8	8	10	10	12	12	12	12
1100	-	8	8	10	10	10	12	12	12	12
1200	-	8	8	10	10	12	12	12	12	12

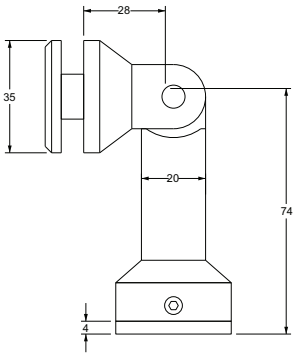

Quality	Finish	art.	glass t	glass hole
AISI304	satin	GS-304/ZA-100-1	8-10	25

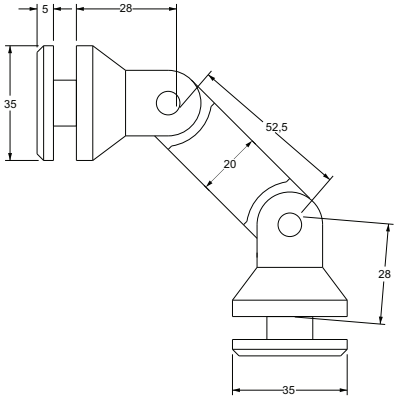

Quality	Finish	art.	glass t	glass hole
AISI304	satin	GS-304/ZA-100-2	8-10	25

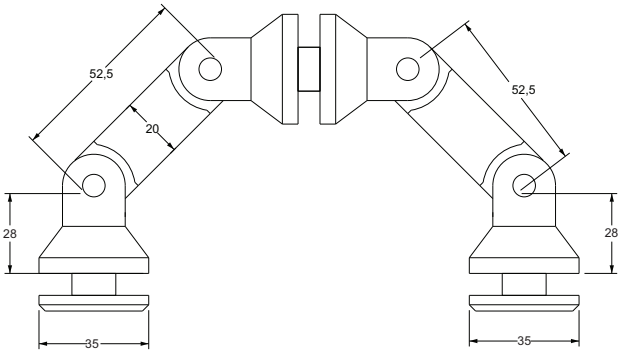

Quality	Finish	art.	glass t	glass hole
AISI304	satin	GS-304/ZA-100-3	8-10	25

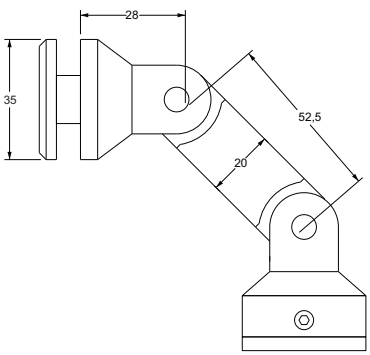

Quality	Finish	art.	glass t	glass hole
AISI304	satin	GS-304/ZA-100-4	8-10	25

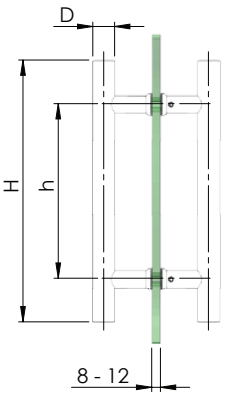

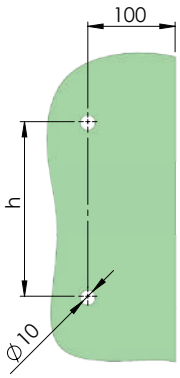

Quality	Finish	Effect	art.	D	H	h	
AISI304	satin	Silver	GS-304/M1-25-300/S	25	300	200	6
		Black	GS-BLACK/M1-25-300/S				
		Silver	GS-304/M1-25-400/S		400	300	
			GS-304/M1-25-500/S		500	400	

new

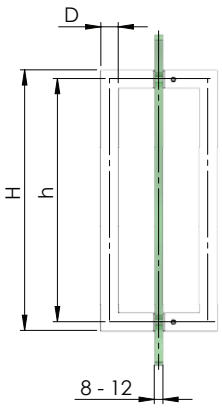

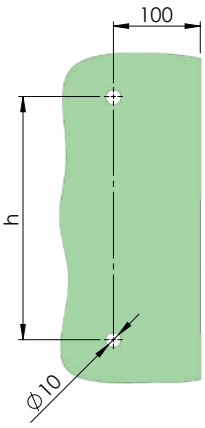

Quality	Finish	Effect	art.	D	H	h	
AISI304	satin	Silver	GS-304/M3-20-300/S	20	320	300	6
			GS-304/M3-20-400/S		420	400	
			GS-304/M3-20-500/S		520	500	
		Black	GS-BLACK/M3-20-500/S				

new

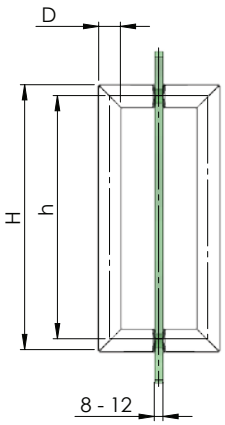

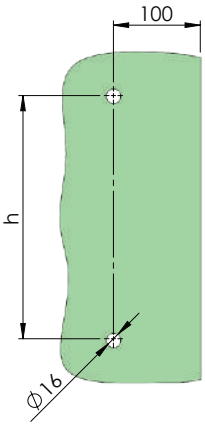

Quality	Finish	art.	D	H	h	
AISI304	satin	GS-304/M4-25-400/S	25	420	400	6
		GS-304/M4-25-500/S		520	500	

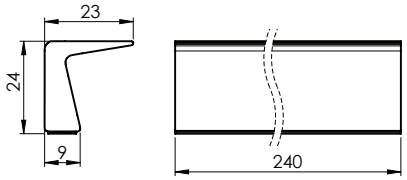

Quality	Finish	Effect	art.	axb	L
ANODIZED ALUMINIUM	satin	Silver	GS-AL/M3-24-240/S-E	24x24	240

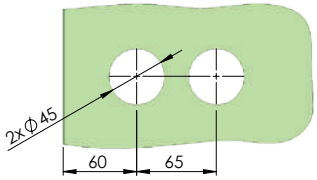

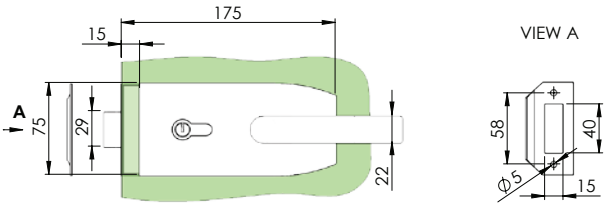

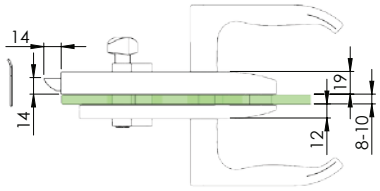

Quality	Finish	art.
AISI304	satin	GS-304/D-201/S

GS-304/D-207/S

GS-304/D-207-H/S

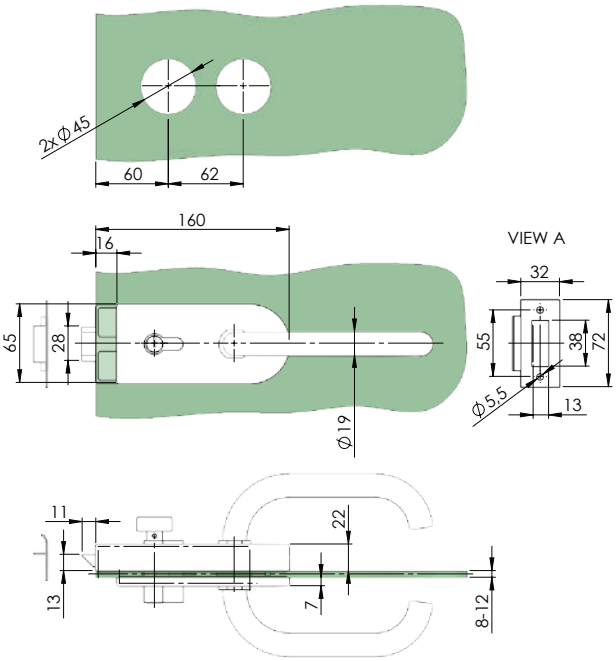

Quality	Finish	art.	
AISI304	satin	GS-304/D-207/S	✓
		GS-304/D-207-H/S	-

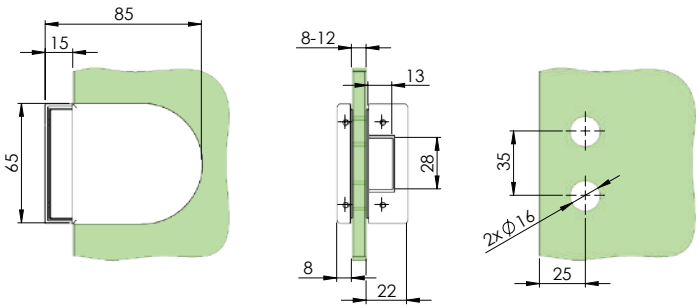

Quality	Finish	art.	compatibility
AISI304	satin	GS-304/D-L18S/S	GS-304/D-206/S GS-304/D-207/S

GS-304/D-206/S

GS-BLACK/D-206/S

GS-304/D-206-H/S

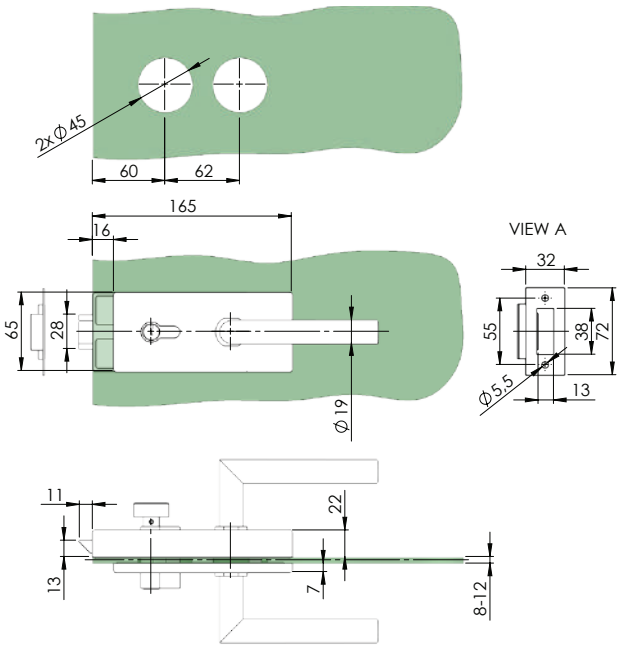

Quality	Finish	Effect	art.	
AISI304	satin	Silver	GS-304/D-206/S	✓
		Black	GS-BLACK/D-206/S	
		Silver	GS-304/D-206-H/S	-

new

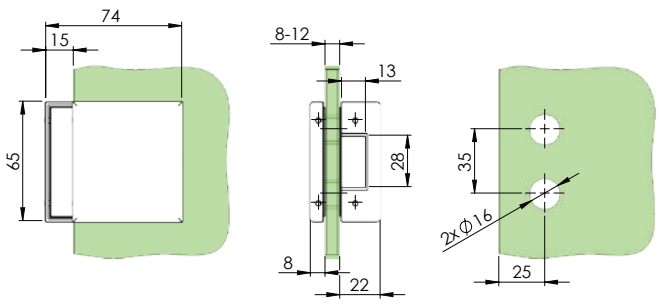

Quality	Finish	art.	compatibility
AISI304	satin	GS-304/D-L18R/S	GS-304/D-206/S GS-304/D-207/S

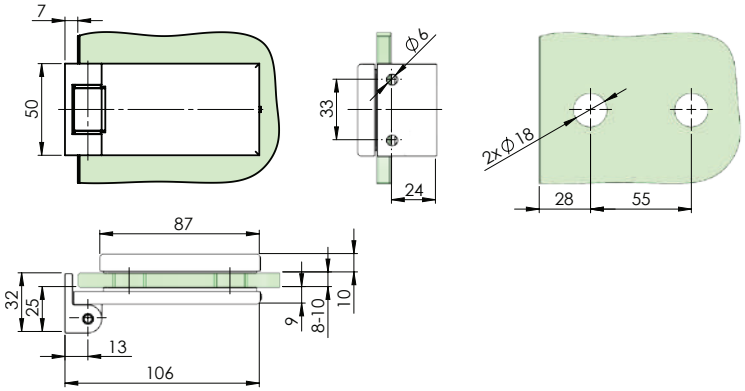

Quality	Finish	Effect	art.	G max. (kg)/2pcs
ANODIZED ALUMINIUM	satin	INOX	GS-AL/D-808/S-VA	45

GS-BLACK/D-809/S

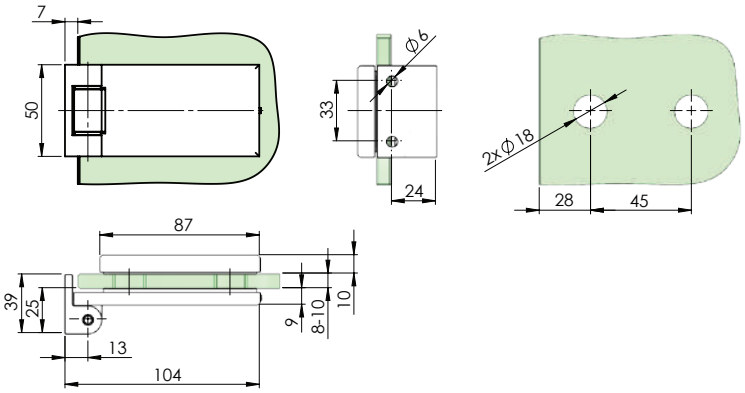

GS-AL/D-809/S-VA

Quality	Finish	Effect	art.	G max. (kg)/2pcs
ANODIZED ALUMINIUM	satin	Silver	GS-AL/D-809/S-VA	45
		Black	GS-BLACK/D-809/S	

new

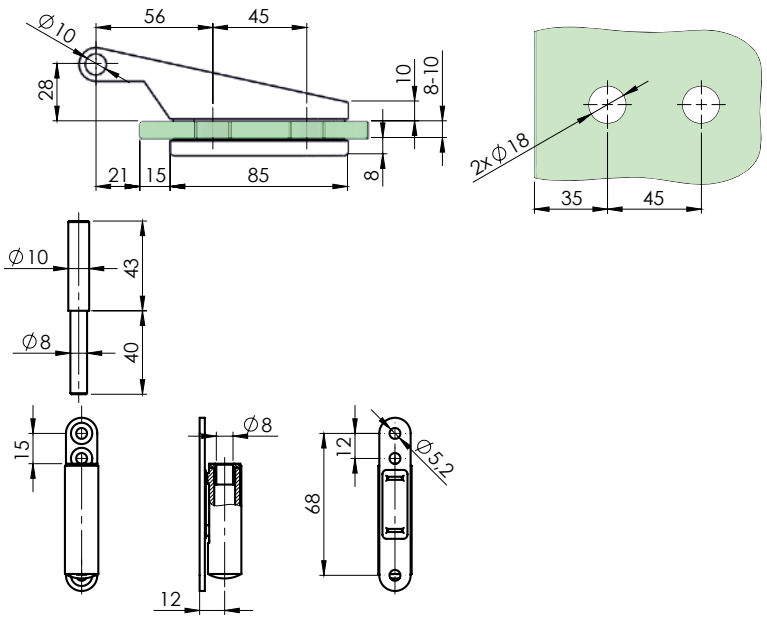

Quality	Finish	Effect	art.	G max. (kg)/2pcs
AISI304	satin	INOX	GS-304/D-805/S-B	45
ANODIZED ALUMINIUM			GS-AL/D-805/S-VA	

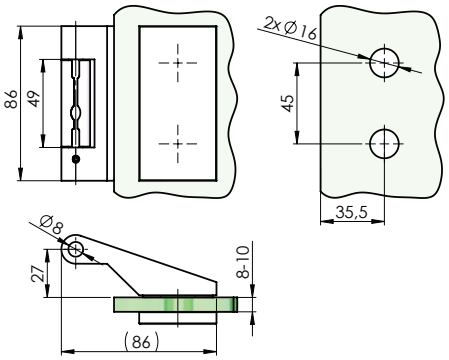

Quality	Finish	Effect	art.	G max. (kg)/2pcs
AISI304	satin	INOX	GS-304/D-810/S	50
ANODIZED ALUMINIUM			GS-AL/D-810/S-VA	

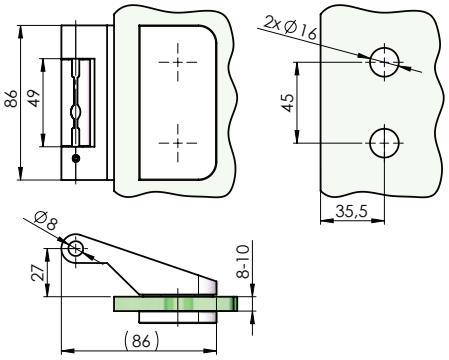

Quality	Finish	Effect	art.	G max. (kg)/2pcs
AISI304	satin	INOX	GS-304/D-811/S	50
ANODIZED ALUMINIUM			GS-AL/D-811/S-VA	

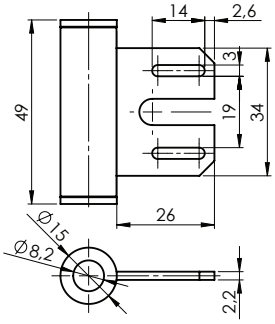

Quality	Finish	art.	G max. (kg)/2pcs
steel	Zn	GS-ZN/D-V180-OS	50

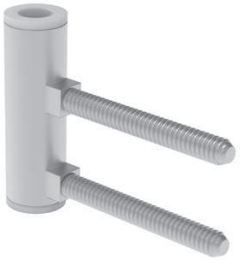

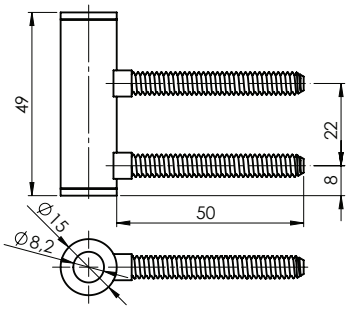

Quality	Finish	art.	G max. (kg)/2pcs
steel	Zn	GS-ZN/D-V180-OW	50

7 GLASS WALL PROFILES

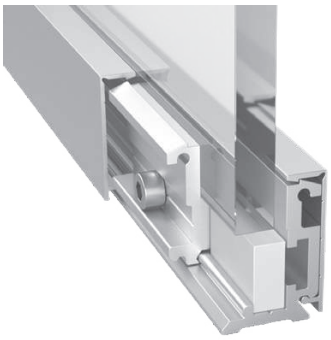

GLAZING PROFILE

U - PROFILES

GLASS JOINING PROFILES

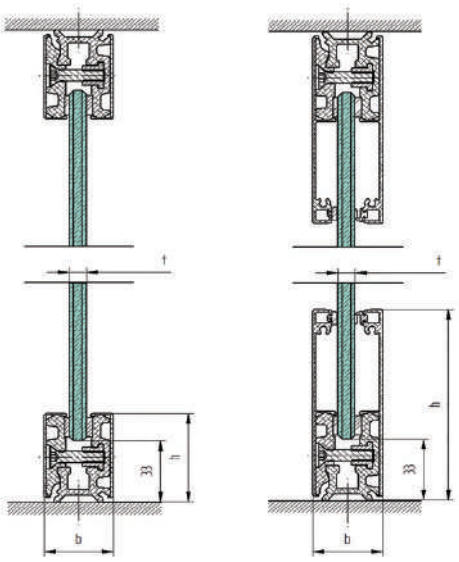

art.
GS-AL/ZP-32x46/N/B
GS-AL/ZP-32x100/N/B
GS-304/ZP-32x46/S
GS-304/ZP-32x100/S
GS-AL/ZP-32x46/N/E
GS-AL/ZP-32x100/N/E
GS-AL/ZP-32x46/S-VA

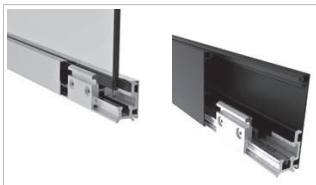

GS-.../N/B

GS/ZP-002 | GS/ZP-L02 | GS/ZP-A02-a, GS/ZP-A02-i, GS/ZP-A02-ai | GS-AL/ZP-A02/N/B | GS-AL/ZP-A02W/N/E, GS-304/ZP-A02W/S | GS-AL/ZP-A02W/N/B | GS-PVC/ZP-32666

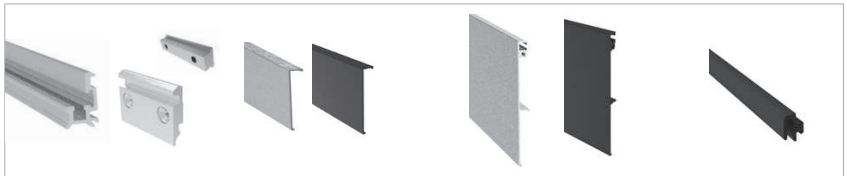

3 m	9 pcs/3m	3 m		3m		3m
ALUMINIUM		black	AISI304	ALUMINIUM	black	AISI304

+

Quality	Finish	Effect	art.	Quantity/ pairs	b x h	Glass t 8	10	12
ALUMINIUM	natural	black	GS-AL/ZP-Z02A-8/N/B	1	32x46	✓		
			GS-AL/ZP-Z02A-10/N/B				✓	
			GS-AL/ZP-Z02A-12/N/B					✓
			GS-AL/ZP-Z02AW-8/N/B		33x100	✓		
			GS-AL/ZP-Z02AW-10/N/B				✓	
			GS-AL/ZP-Z02AW-12/N/B					✓
AISI304	satin	-	GS-304/ZP-Z02A-8/S		32x46	✓		
			GS-304/ZP-Z02A-10/S				✓	
			GS-304/ZP-Z02A-12/S					✓
			GS-304/ZP-Z02AW-8/S		33x100	✓		
			GS-304/ZP-Z02AW-10/S		33x100		✓	
			GS-304/ZP-Z02AW-12/S		33x100			✓
ANODIZED ALUMINIUM	natural	Silver	GS-AL/ZP-Z02A-8/N/E		32x46	✓		
			GS-AL/ZP-Z02A-10/N/E				✓	
			GS-AL/ZP-Z02A-12/N/E					✓
			GS-AL/ZP-Z02AW-8/N/E		33x100	✓		
			GS-AL/ZP-Z02AW-10/N/E		33x100		✓	
			GS-AL/ZP-Z02AW-12/N/E		33x100			✓

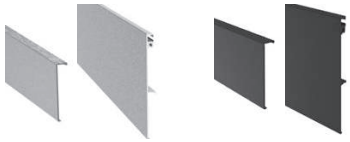

GS-.../N/B

Quality	Finish	Effect	art.	Quantity/ pcs	h	L
ALUMINIUM	natural	black	GS-AL/ZP-A02/N/B	1	46	3000
			GS-AL/ZP-A02W/N/B			
AISI304	satin	-	GS/ZP-A02-i		100	
			GS-304/ZP-A02W/S			
ANODIZED ALUMINIUM	natural	Silver	GS/ZP-A02-a			
	satin	INOX	GS/ZP-A02-ai		46	
	natural	Sllver	GS-AL/ZP-A02W/N/E		100	

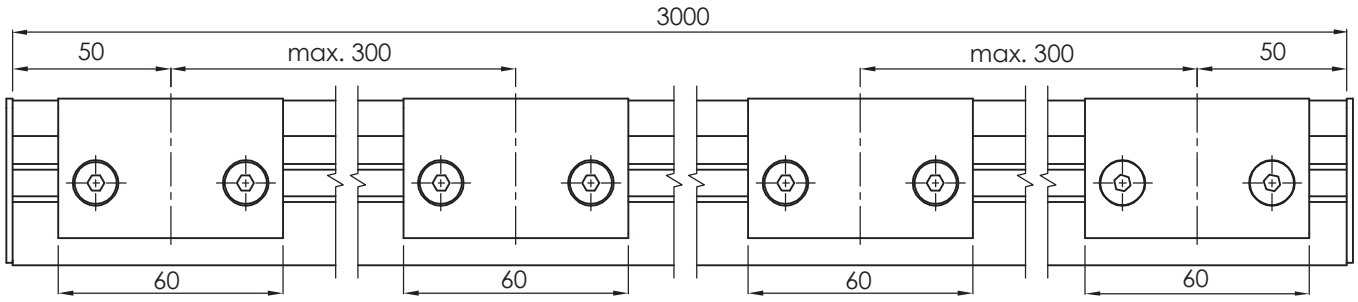

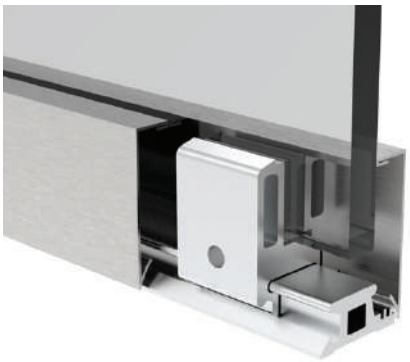

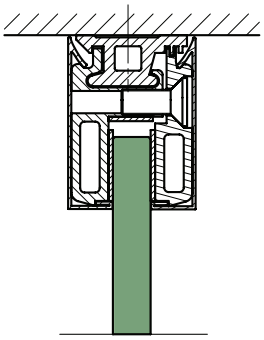

Quality	Finish	Effect	art.	L	G max	glass t
ALUMINIUM	satin	INOX	GS-304/ZP-30x40/S	3000	30 kg/m	10-12

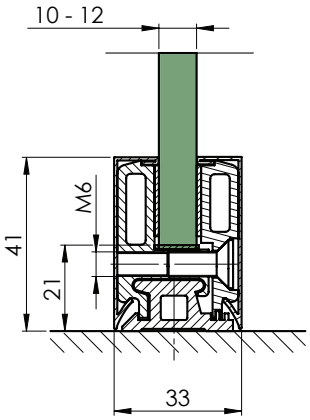

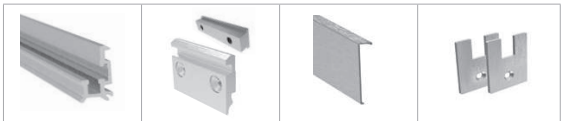

art	1 x 3 m	9 x 1 pcs	2 x 3 m	2 pcs
GS-304/ZP-30x40/S	ALUMINIUM		AISI304	PVC

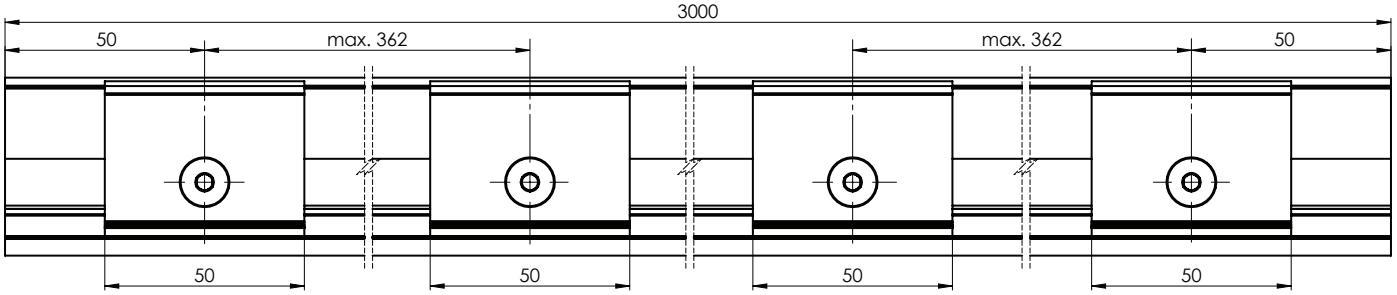

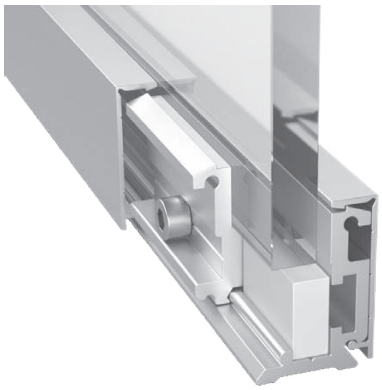

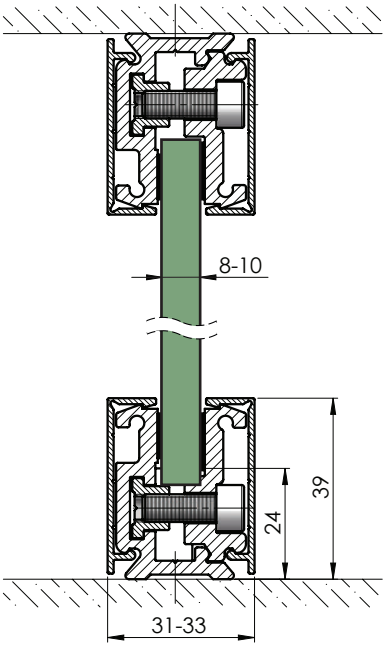

Quality	Finish	Effect	art.	L	G max	glass t
ANODIZED ALUMINIUM	natural	Silver	GS-AL/ZP-31x40/N/E-U	3000	45 kg/m	8-10

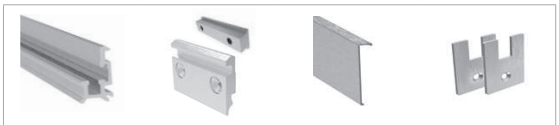

art	1 x 3 m	6 pcs	2 x 3 m	2 pcs
GS-AL/ZP-31x40/N/E-U	ALUMINIUM			PVC

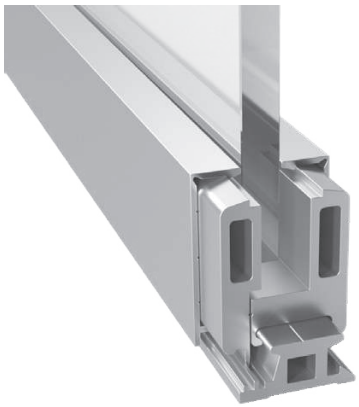

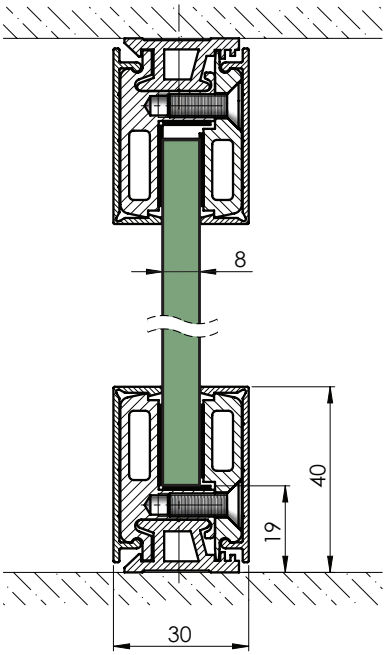

Quality	Finish	Effect	art.	L	G max	glass t
ANODIZED ALUMINIUM	natural	Silver	GS-AL/ZP-30x40/N/E-U	3000	30 kg/m	8

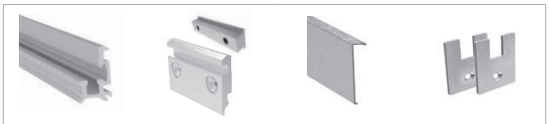

art	1 x 3 m	6 pcs	2 x 3 m	2 pcs
GS-AL/ZP-30x40/N/E-U	ALUMINIUM			PVC

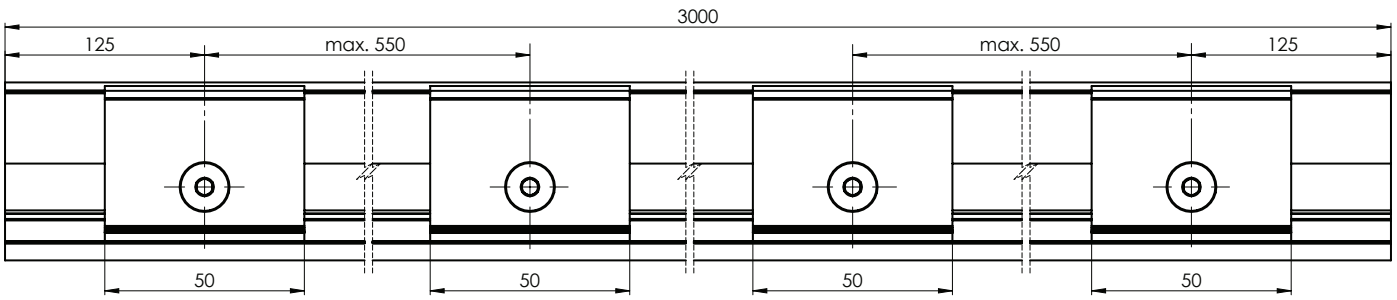

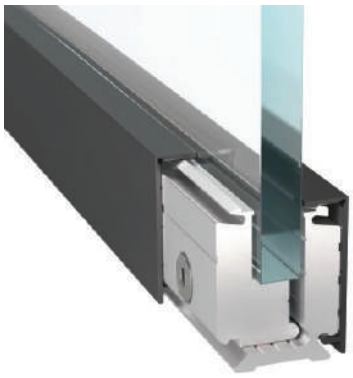

Quality	Finish	Effect	art.	L	G max	glass t
ANODIZED ALUMINIUM	natural	Silver	GS-AL/ZP-30x39/N/E-U	3000	45 kg/m	8-10
		Black	GS-BLACK/ZP-30x39/N/B-U			

new

art	1 x 3 m	6 pcs	2 x 3 m
GS-AL/ZP-30x39/N/E-U	ALUMINIUM		

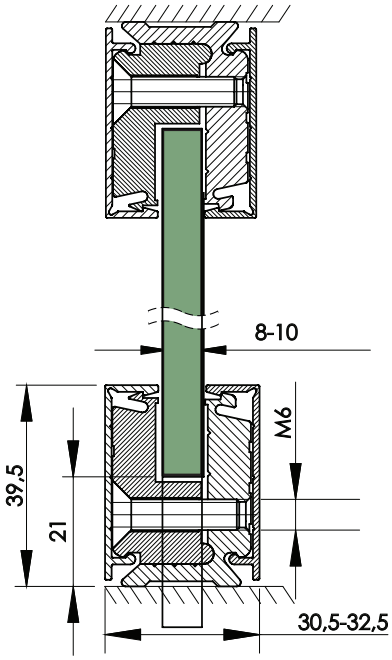

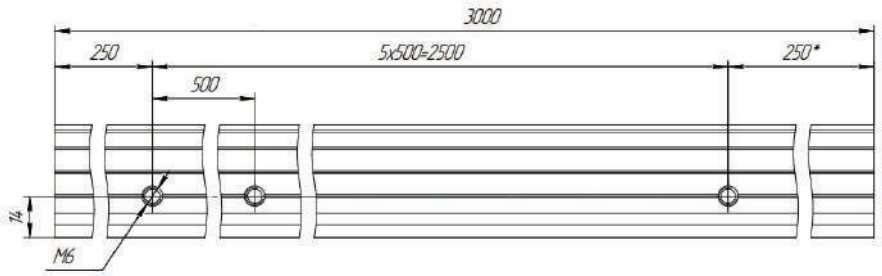

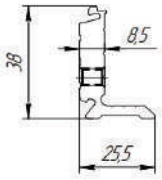

GS-AL/ZP...

GS-BLACK/ZP...

Quality	Finish	Effect	art.	L	G max	glass t
ANODIZED ALUMINIUM ALUMINIUM	natural	Silver	GS-AL/ZP-3535/N/E	3000	30 kg/m	8-10
		RAL BLACK	GS-BLACK/ZP-3535/N/B			

new

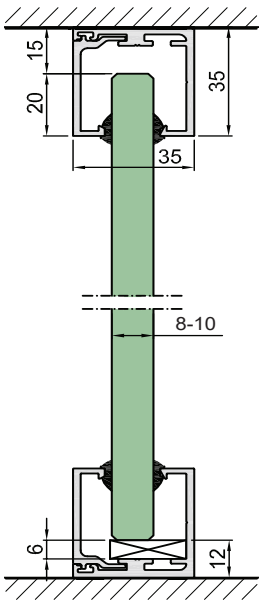

+

	8	10	L	Quantity/ pcs
	GS-PVC/ZP-3535-8/N/B + GS-PVC/ZP-3535-10/N/B	GS-PVC/ZP-3535-10/N/B	3000	2
	GS-PVC/ZP-3535-8/N/T + GS-PVC/ZP-3535-10/N/T	GS-PVC/ZP-3535-10/N/T		

new

+

22x6x100	Left/Right
GS-PVC/G-3535/N/B	GS-PVC/C-3535
PVC	

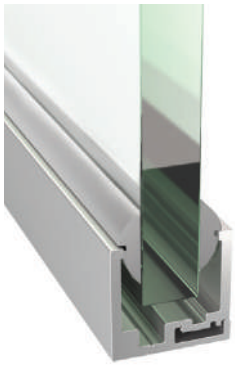

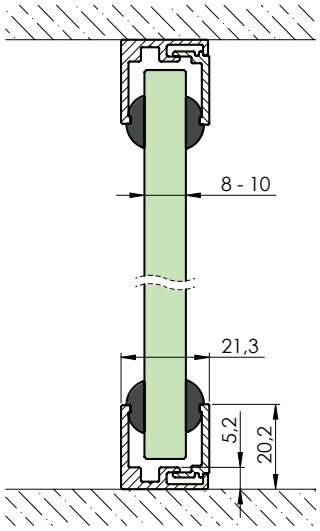

Quality	Finish	Effect	art.	L	glass t
ANODIZED ALUMINIUM	natural	Silver	GS-AL/ZP-20x21/N/E	3000	8-10

+

	8	10	L	Quantity/ pcs
	GS-PVC/ZP-2021-8/N/G	GS-PVC/ZP-2021-10/N/G	3000	2

+

10x3x100

GS-PVC/G-2021/N/B

PVC

new

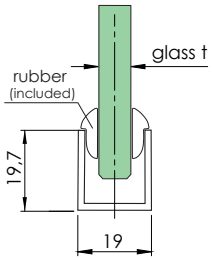

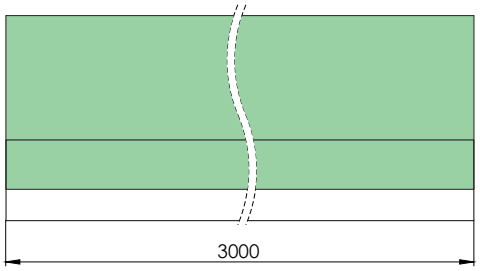

Quality	Finish	Effect	art.	L	glass t
ANODIZED ALUMINIUM	natural	Silver	GS-AL/ZP-2019/N/E	3000	8-10
		Black	GS-BLACK/ZP-2019/N/B		

+

	glass t		L	Quantity pcs
	8	10		
	GS-PVC/ZP-3535-8/N/T + GS-PVC/ZP-3535-10/N/T	GS-PVC /ZP-3535-10/N/T	3000	2
	GS-PVC/ZP-3535-8/N/B + GS-PVC/ZP-3535-10/N/B	GS-PVC /ZP-3535-10/N/B		

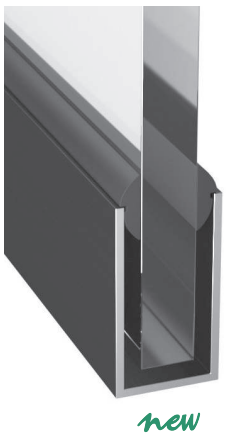

new

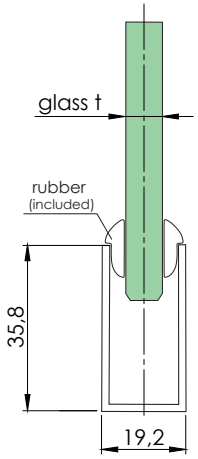

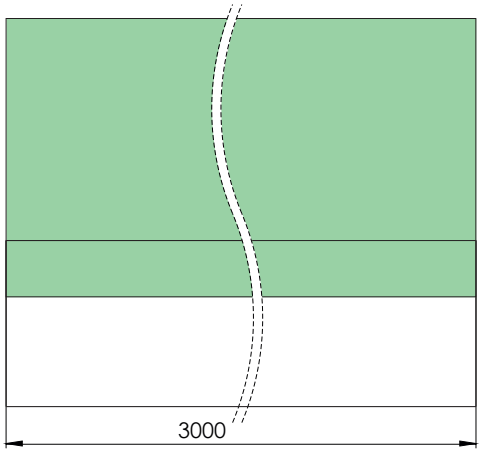

Quality	Finish	Effect	art.	L	glass t
ANODIZED ALUMINIUM	natural	Silver	GS-AL/ZP-3619/N/E	3000	8-10
		Black	GS-BLACK/ZP-3619/N/B		

+

	glass t		L	Quantity pcs
	8	10		
	GS-PVC/ZP-3535-8/N/T + GS-PVC/ZP-3535-10/N/T	GS-PVC /ZP-3535-10/N/T	3000	2
	GS-PVC/ZP-3535-8/N/B + GS-PVC/ZP-3535-10/N/B	GS-PVC /ZP-3535-10/N/B		

+

15x9x28

GS-PVC/G-3619/N/B

PVC

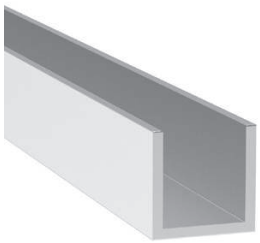

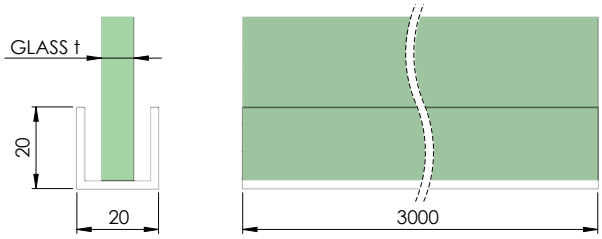

Quality	Finish	Effect	art.	L	glass t
ANODIZED ALUMINIUM	satin	INOX	GS-AL/ZP-2020/N/E	3000	8-10

+

	glass t		L	Quantity pcs
	8	10		
	GS-PVC/ZP-3535-8/N/T + GS-PVC/ZP-3535-10/N/T	GS-PVC /ZP-3535-10/N/T	3000	2
	GS-PVC/ZP-3535-8/N/B + GS-PVC/ZP-3535-10/N/B	GS-PVC /ZP-3535-10/N/B		

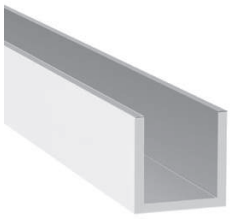

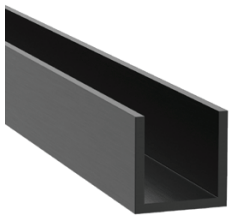

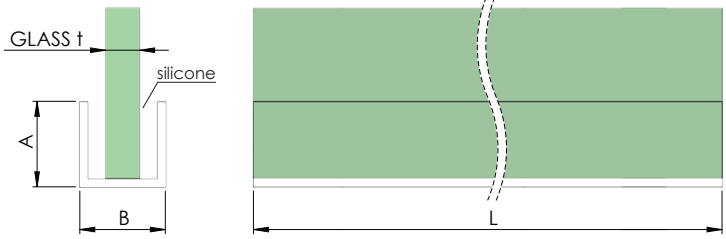

GS-AL/ZP...

GS-BLACK/ZP...

Quality	Finish	Effect	art.	A	B	L	glass t	GS-AL/C-2012/P/Cr	GS-AL/C-2012/S-E	GS-AL/C-2014/P/Cr	
ANODIZED ALUMINIUM	polish	Silver	GS-AL/ZP-2012/P/Cr	20	12	3000	8	optional			✓
			GS-AL/ZP-2014/P/Cr		14		10			optional	
	satin		GS-AL/ZP-2012/S-E						optional		
		Black	GS-BLACK/ZP-2012/S-E		12		8				

new

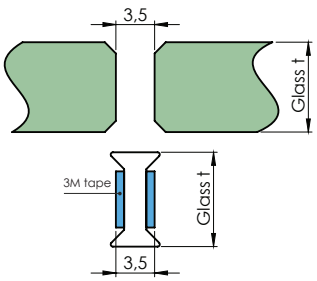

Quality	Finish	art.	L	glass t
PVC	transparent	GS-PVC/H-8	3000	8
		GS-PVC/H-10		10
		GS-PVC/H-12		12
		GS-PVC/H-14		14

new

8 GLASS DOOR FRAMES

DOOR FRAMES

DOOR HANDLES

ACCESORIES

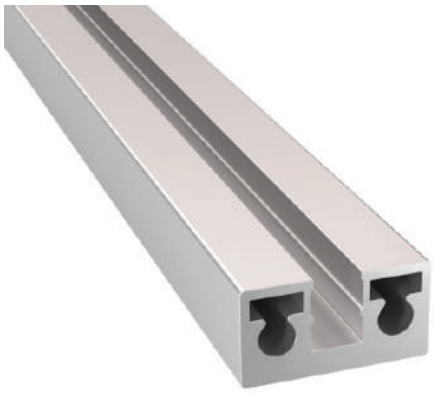

Components

Quality	Finish	Effect	art.	L	glass t
ANODIZED ALUMINIUM	natural	Silver	GS-AL/ZR-N-E	3000	8

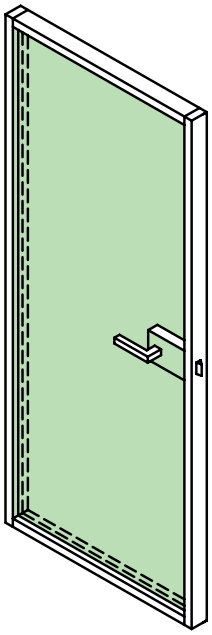

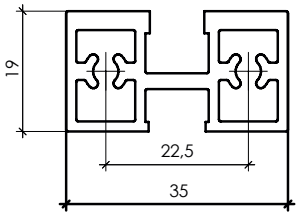

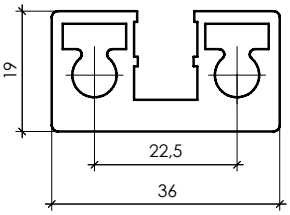

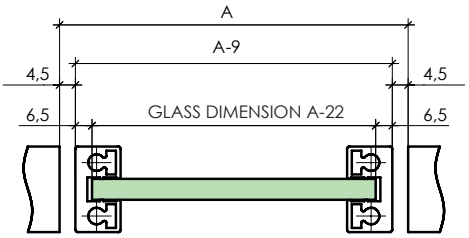

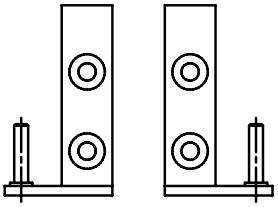

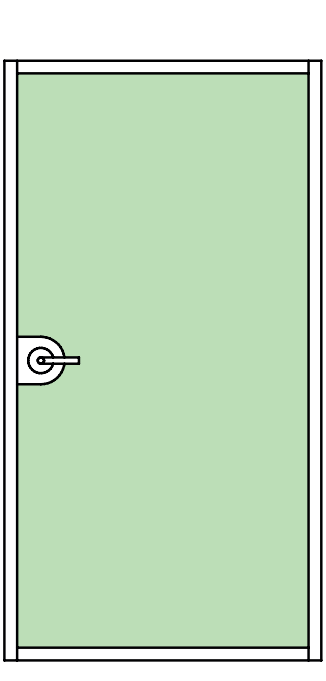

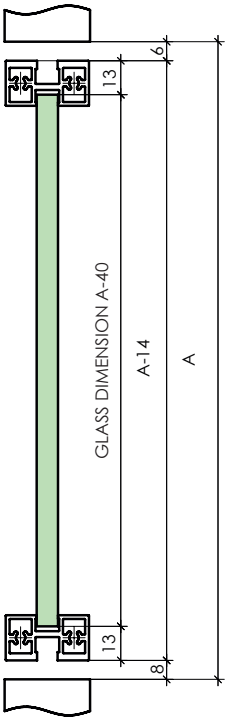

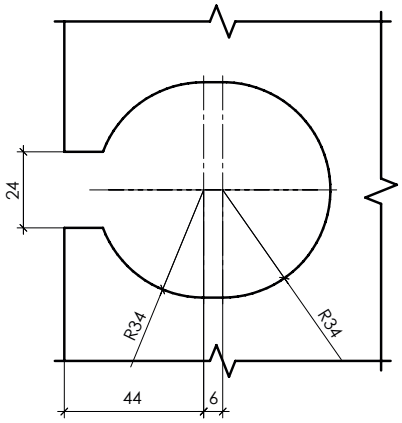

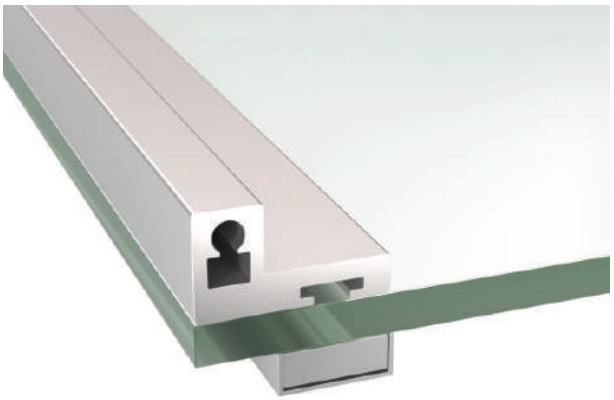

Components

Quality	Finish	Effect	art.	L	glass t
ANODIZED ALUMINIUM	natural	Silver	GS-AL/ZP-N-E	2500	8-10

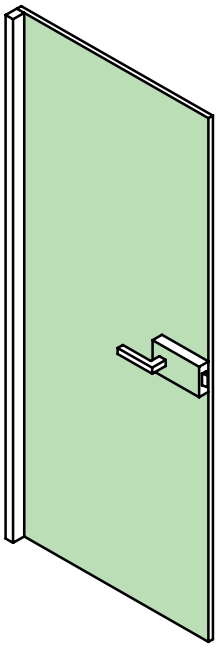

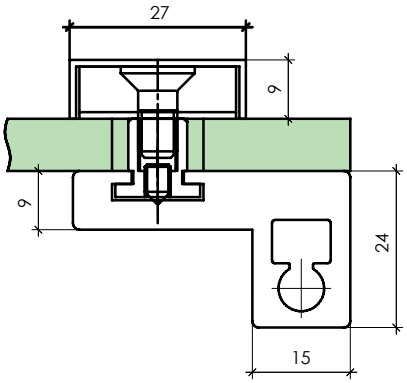

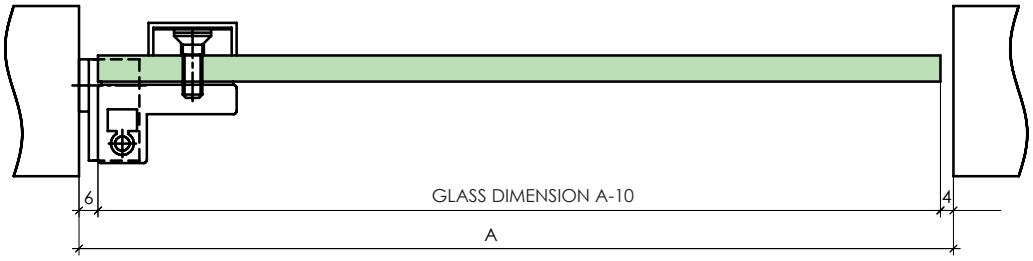

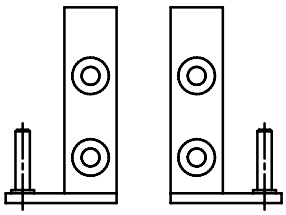

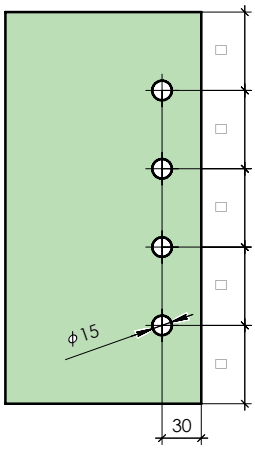

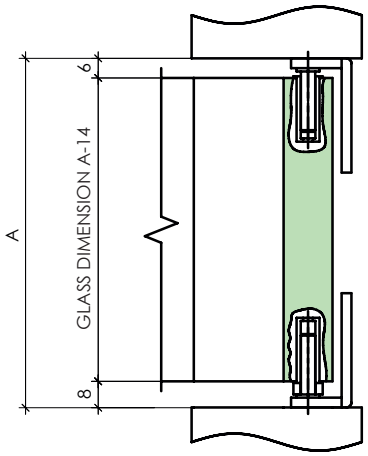

Quality	Finish	Effect	art.	L
ANODIZED ALUMINIUM	natural	Silver	GS-AL/ZU-N-E-U	2300x1200x2300

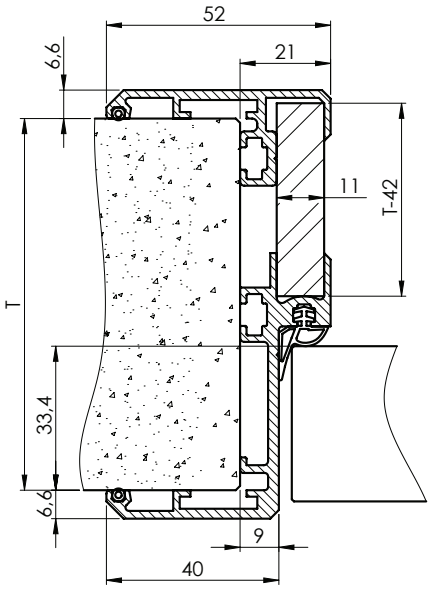

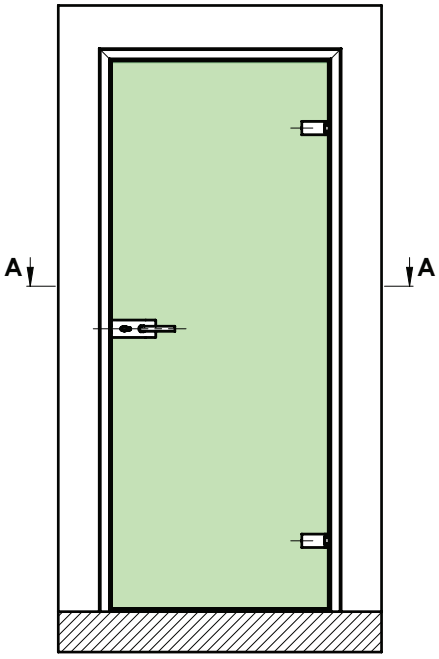

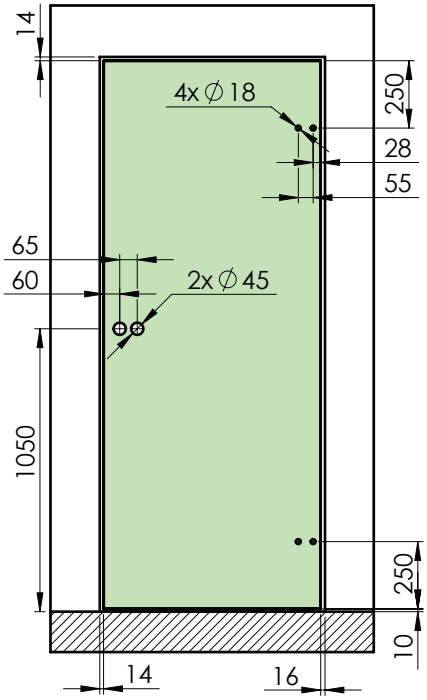

SECTION A-A

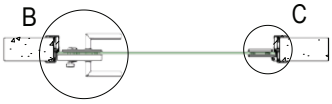

DETAIL B

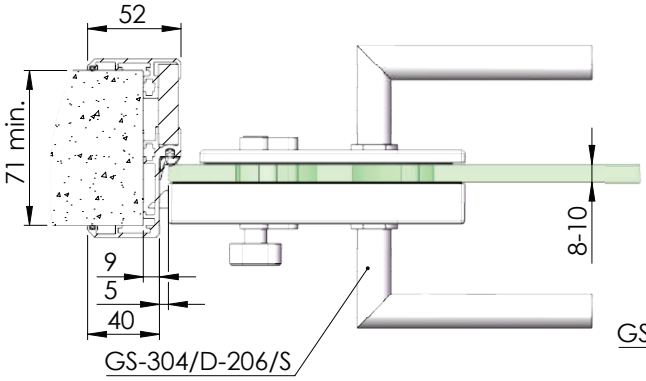

DETAIL C

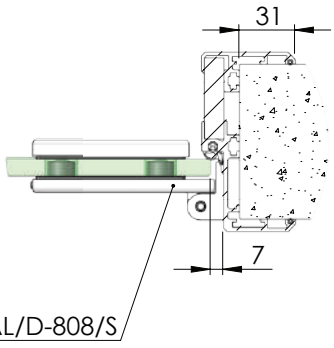

GS-AL/ZZ-N-E-U

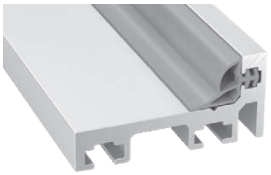

GS-AL/ZL-N-E-U

Components

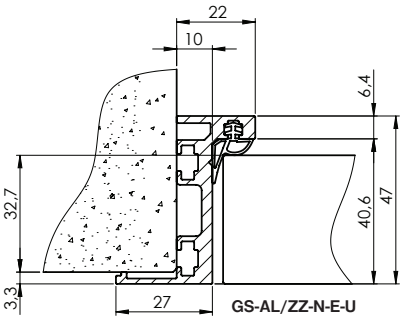

GS-AL/ZZ-N-E-U

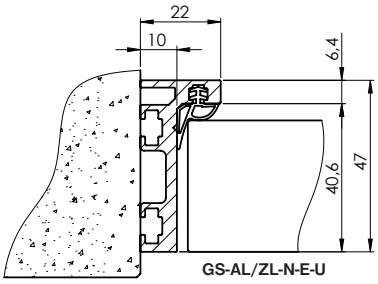

GS-AL/ZL-N-E-U

Quality	Finish	Effect	art.	L
ANODIZED ALUMINIUM	natural	Silver	GS-AL/ZZ-N-E-U	2300x1200x2300
			GS-AL/ZL-N-E-U	

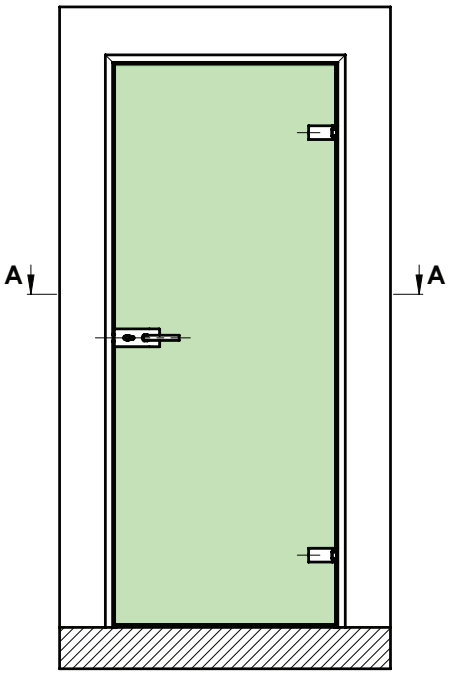

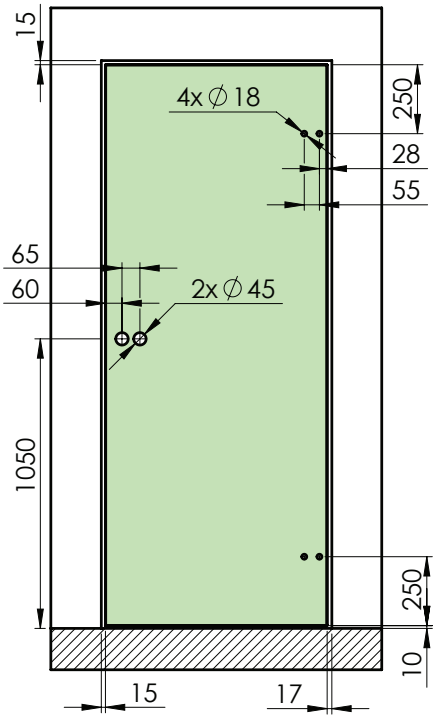

SECTION A-A

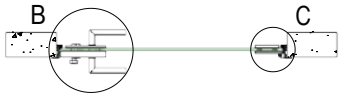

DETAIL B

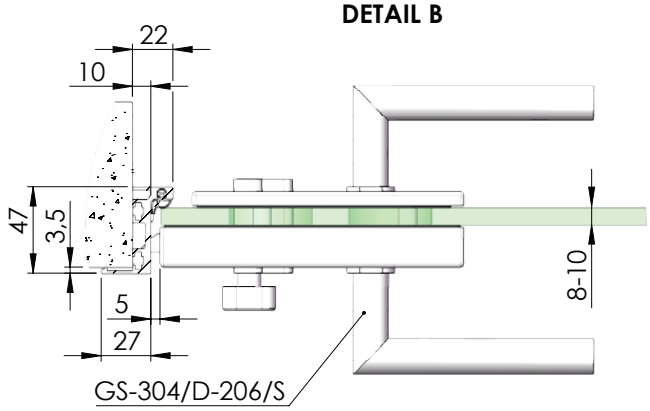

GS-304/D-206/S

DETAIL C

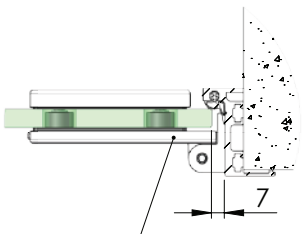

GS-AL/D-808/S

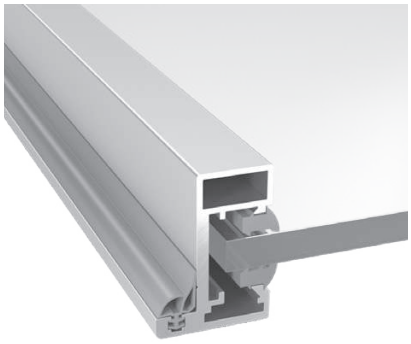

Components

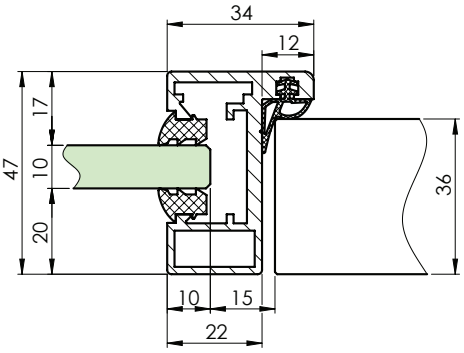

Quality	Finish	Effect	art.	glass t	L
ANODIZED ALUMINIUM	natural	Silver	GS-AL/ZG-N-E-U	8-10	2300x1200x2300

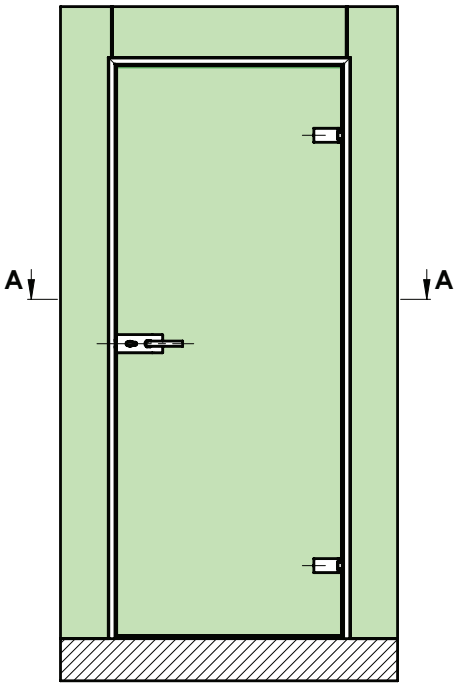

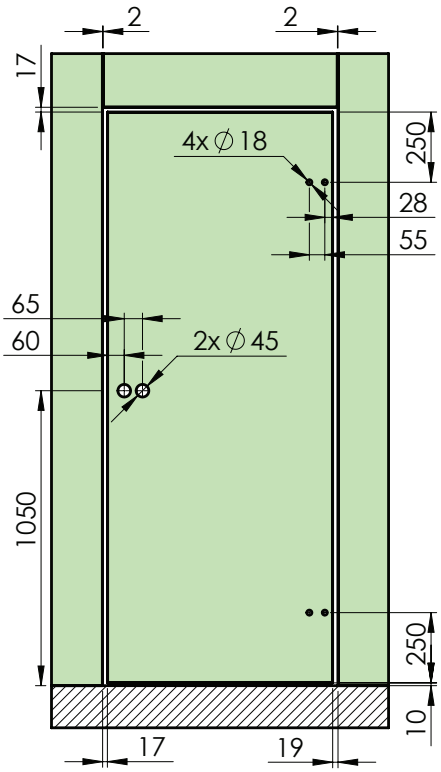

SECTION A-A

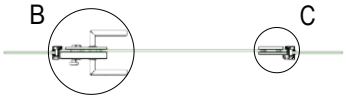

DETAIL B

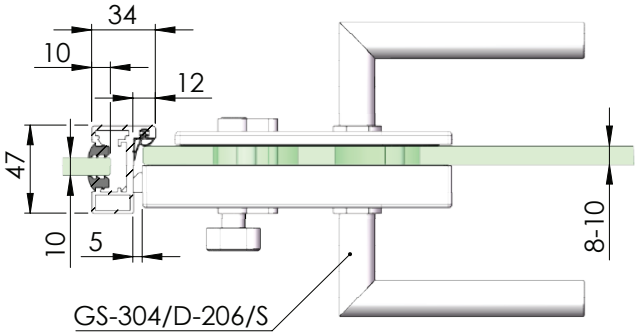

DETAIL C

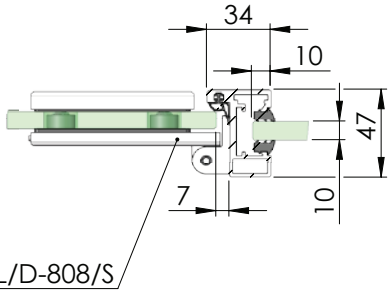

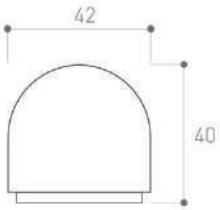

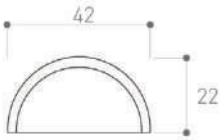

Quality	Finish	art.
PVC	transparent	D8/DD

new

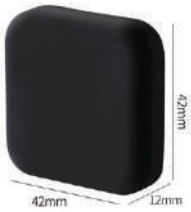

Quality	Finish	art.
PVC	black	D8/DK-B
	gray	D8/DK-G
	white	D8/DK-W

new

DOOR HANDLES

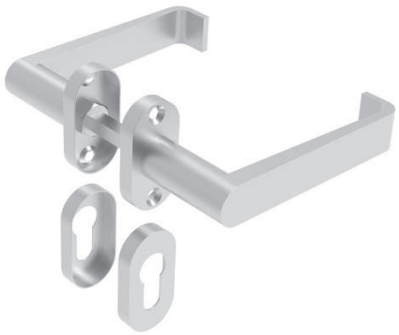

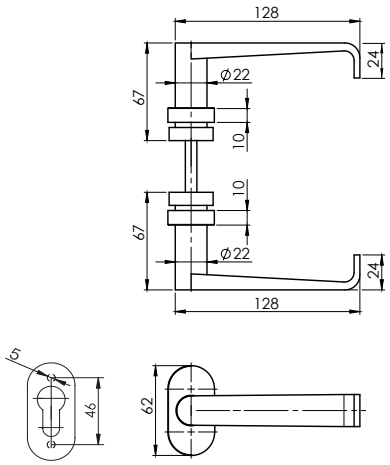

Quality	Finish	art.	Model
AISI304	satin	D8/15-i	K01

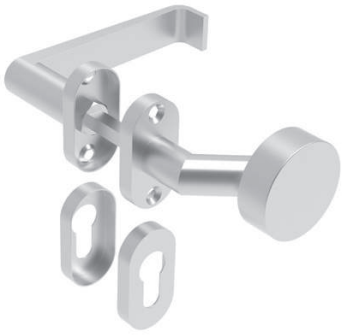

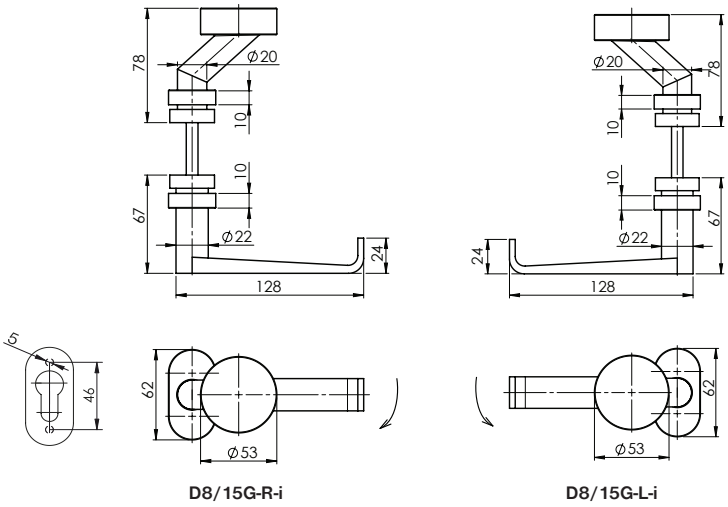

D8/15G-R-i

D8/15G-L-i

Quality	Finish	art.	Orientation	Model
AISI304	satin	D8/15G-R-i	right	K02,K11
		D8/15G-L-i	left	

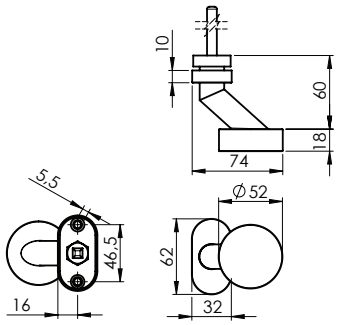

Quality	Finish	art.	Model
AISI304	satin	D8/014-i	K320

D8/09i D8/09B-i D8/08i D8/08B-i

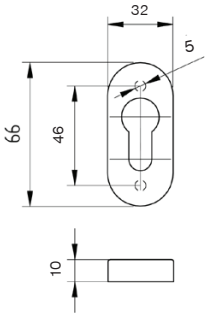

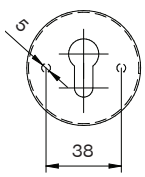

Quality	Finish	art.	Model	
AISI304	satin	D8/09-i	K01	new
		D8/09B-i		
		D8/08-i		new
		D8/08B-i		
		D8/08-WC		new
		D8/09-WC		

D8/03-i

D8/03-BB

Quality	Finish	art.	Model
AISI304	satin	D8/03-i	K02
	RAL	D8/03-BLACK	
AISI201	satin	D8/03-BB	

new

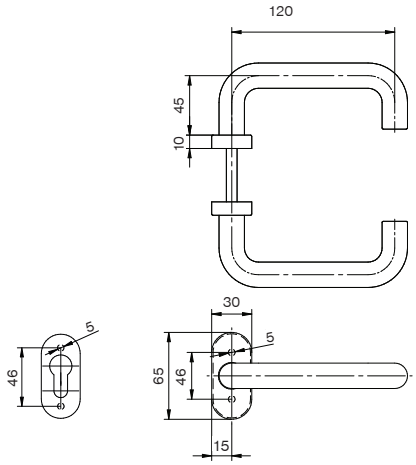

D8/01-i

D8/01-BB

Quality	Finish	art.	Model
AISI304	satin	D8/01-i	K02
AISI201		D8/01-BB	

new

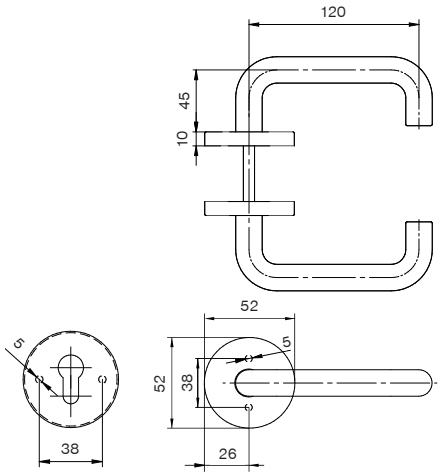

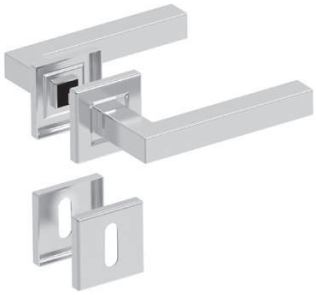

D8/06-i

D8/06-BB

Quality	Finish	art.	Model
AISI304	satin	D8/06-i	K01
AISI201		D8/06-BB	

new

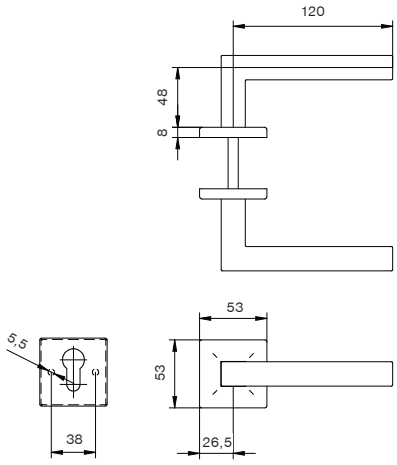

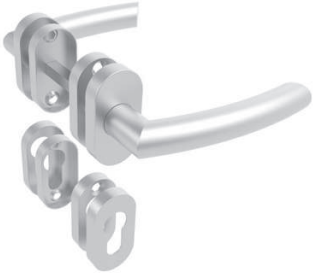

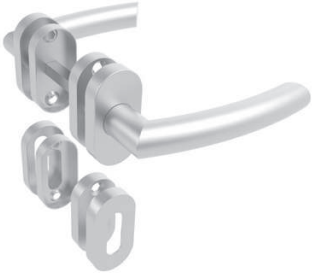

D8/010-i

D8/010-BB

Quality	Finish	art.	Model
AISI304	satin	D8/010-i	K01
AISI201		D8/010-BB	

new

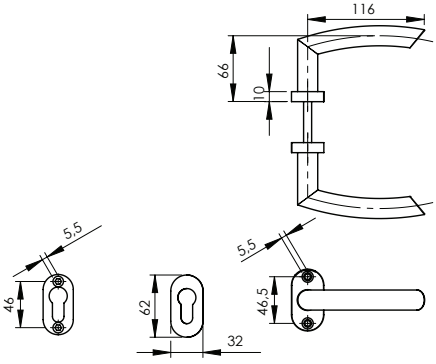

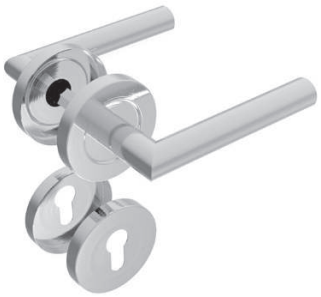

D8/02-i

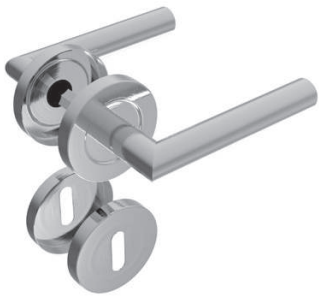

D8/02-BB

Quality	Finish	art.	Model
AISI304	satin	D8/02-i	K02
AISI201		D8/02-BB	

new

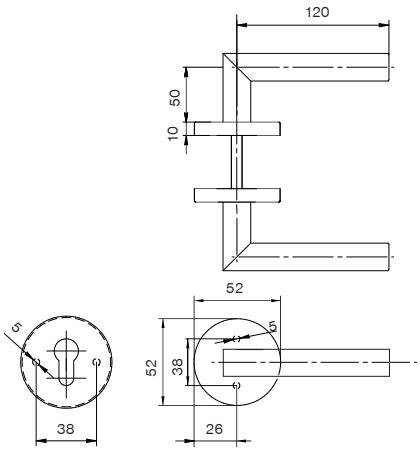

D8/05-i

D8/05-BB

Quality	Finish	art.	Model
AISI304	satin	D8/05-i	K02
	RAL	D8/05-BLACK	
AISI201	satin	D8/05-BB	

new

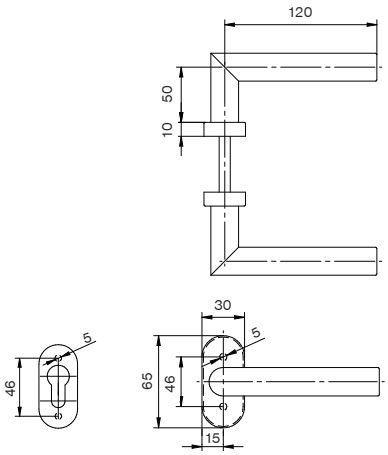

Quality	Finish	art.	Orientation		Model
AISI304	satin	D8/05G-R-i	right	fixed position	K02,K11
		D8/05G-L-i	left		
		D8/05-GR	right	opens together with handle	
		D8/05-GL	left		

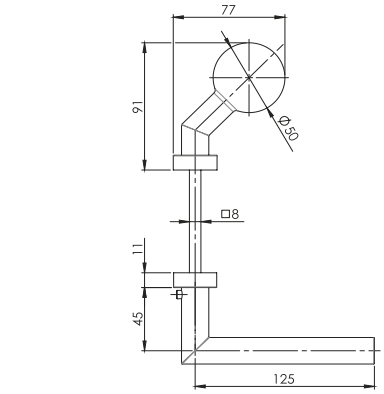

Quality	Finish	art.			Model
AISI304	satin	D8/04-i	fix	-	K01
		D8/04-2-i	fix	fix	
		D8/04-2-R-i	open	fix	
		D8/04-2-L-i	fix	open	
		D8/04O-2-i	open	open	
	RAL	D8/04-BLACK	fix	-	

new

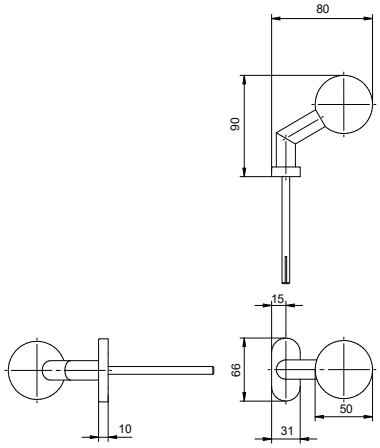

ACCESSORIES

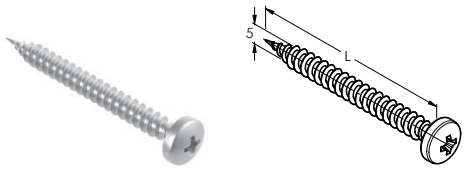

Quality	Finish	art.9	L
AISI304	raw	A-PH 5x20	20
		A-PH 5x35	35

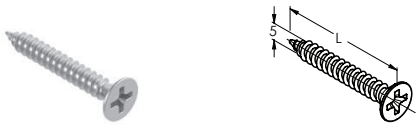

Quality	Finish	art.	L
AISI304	raw	A-DIN 7505A 5x20	20
		A-DIN 7505A 5x35	35

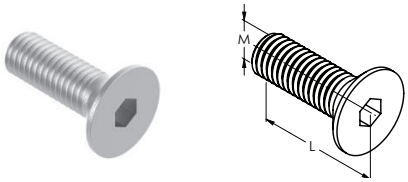

Quality	Finish	art.	M	L
steel 8.8	Zn	DIN 7991 M8x20-Zn	8	20
		DIN 7991 M12x30-Zn	12	30
AISI304	raw	A-DIN 7991-A2 M5x12	5	12
		A-DIN 7991-A2 M5x16		16
		A-DIN 7991-A2 M5x20		20
		A-DIN 7991-A2 M6x8	6	8
		A-DIN 7991-A2 M6x14		14
		A-DIN 7991-A2 M6x16		16
		A-DIN 7991-A2 M6x20		20
		A-DIN 7991-A2 M6x40		40
		A-DIN 7991-A2 M6x60		60
		A-DIN 7991-A2 M8x12	8	12
		A-DIN 7991-A2 M8x16		16
		A-DIN 7991-A2 M8x30		30
		A-DIN 7991-A2 M8x35		35
		A-DIN 7991-A2 M8x70		70
AISI316		A4-DIN 7991 M5x16	5	16
		A4-DIN 7991 M6x14	6	14
		A4-DIN 7991 M6x40		40
		A4-DIN 7991 M8x20	8	20
		A4-DIN 7991 M8x30		30
		A4-DIN 7991 M8x70		70
		A4-DIN 7991 M10x20	10	20
		A4-DIN 7991 M12x30	12	30

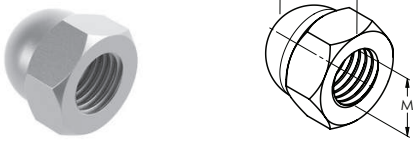

Quality	Finish	art.	M	L
AISI304	raw	A-DIN 1587-A2 M6	6	12
		A-DIN 1587-A2 M8	8	15
		A-DIN 1587-A2 M10	10	18
		A-DIN 1587-A2 M12	12	22
AISI316		A4-DIN 1587 M10	10	18

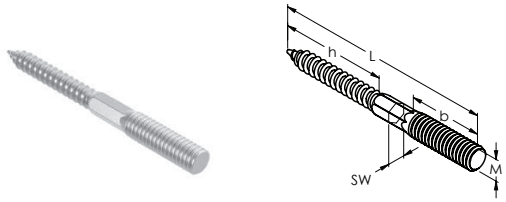

Quality	Finish	art.	M	L	b	h	SW
AISI304	raw	A-DIN 9210 M6x60-A2	6	60	20	37	-
		A-DIN 9210 M8x60-A2	8				
		A-DIN 9210 M8x100-A2		100	42	48	✓
		A-DIN 9210 M10x100-A2	10		30	57	✓
AISI316		A4-DIN 9210 M6x100	6	100			✓
		A4-DIN 9210 M8x60	8	60	20	37	-
		A4-DIN 9210 M8x100		100	42	48	✓

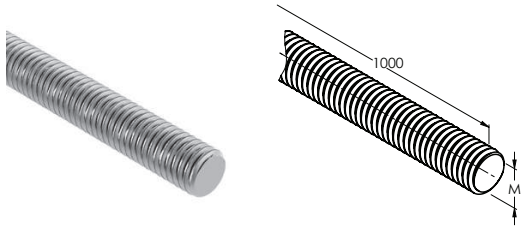

Quality	Finish	art.	M	ETA opt.1	
steel 8.8	Zn	Q5/08-VM250-M10-...	10	✓	new
		Q5/08-VM250-M12-...	12	✓	
AISI304	raw	A-DIN 975 M6	6	-	
		A-DIN 975 M8	8	-	
		A-DIN 975 M10	10	-	
		A-DIN 975 M12	12	-	
AISI316		A4-DIN 975 M10	10	-	
		A5/08-VM250-M10-...-A4	10	✓	new
		A5/08-VM250-M12-...-A4	12	✓	

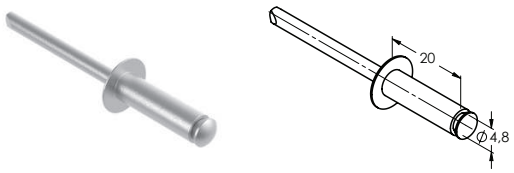

Quality	Finish	art.
AISI304	raw	A-DIN 7337-A2 4,8x20

Quality	Finish	art.	D	d	t	
steel	Zn	DIN 125 10-Zn	20	10	2	
		DIN 9021 10-Zn	30		2,5	
		WIT-SHB M8-Zn	23	9	5	
		WIT-SHB M10-Zn	26	12		new
		WIT-SHB M12-Zn	28	14		
AISI304	raw	A-DIN 125-A2 M5	10	5	1	
		A-DIN 9021-A2 M8	30	8	2,5	
		A-DIN 125-A2 M8	16		1,6	
		A-DIN 125-A2 M10	20	10	2	
		A-DIN 9021-A2 M10	30		2,5	
		A-DIN 125-A2 M12	24	12	2,5	
		A-DIN 433-A2 M12	20		2	
AISI316		A4-DIN 9021 M8	24	8,4	5	
		A4-WIT-SHB M8	23	9		new
		A4-WIT-SHB M10	26	12		
		A4-WIT-SHB M12	28	14		

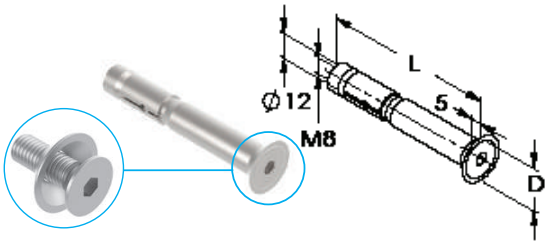

Quality	Finish	art.	L	D/v
steel	Zn	Q5/08-HAZ-M8-80SK/S	80	20,5/5
		Q5/08-FH12-50	125	22/5,8
AISI316	raw	A5/08-HAZ-M8-80SK/A4	80	20,5/5

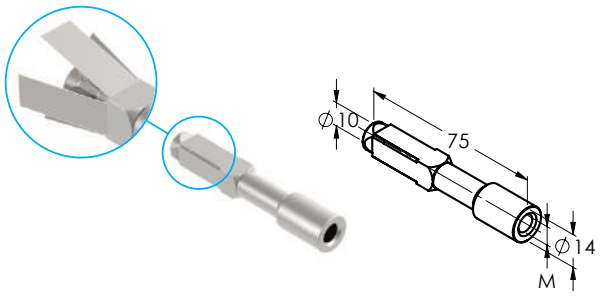

Quality	Finish	art.	M
steel	raw	Q11/FPX-M8	8
		Q11/FPX-M10	10

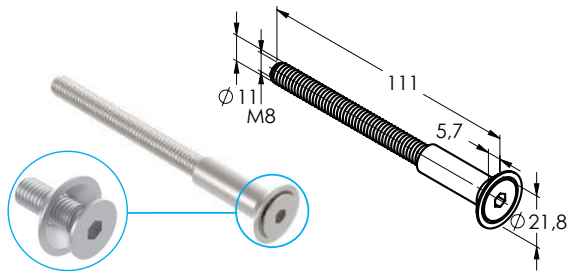

Quality	Finish	art.
AISI304	raw	A5/08-105x11xM8
AISI316		A14/08-105x11xM8

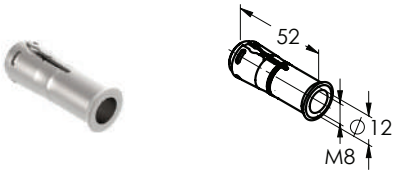

Quality	Finish	art.
steel	Zn	Q5/08-TNTR08-8x52

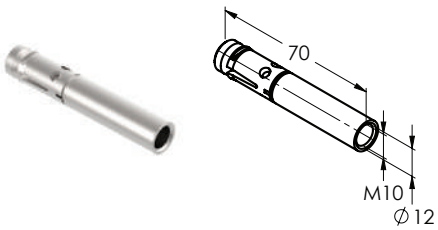

Quality	Finish	art.
steel	Zn	Q5/08-FAZ-IG-M10-70/S
AISI316	raw	A5/08-FAZ-IG-M10-70/A4

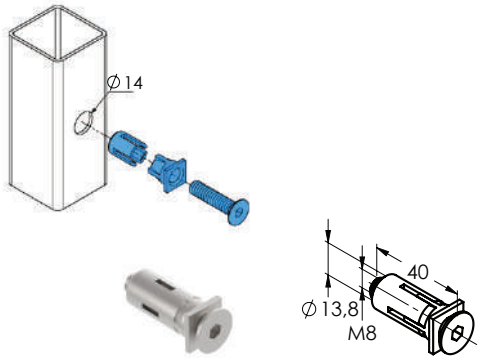

Quality	Finish	art.
steel	Zn	Q5/09-Quick-Fix QF5

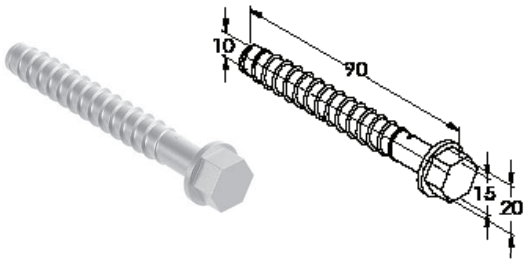

Quality	Finish	art.
steel 5.8	Zn	Q5/08-BS-S-10-90/S
AISI316	raw	A5/08-BS-S-10-90/A4

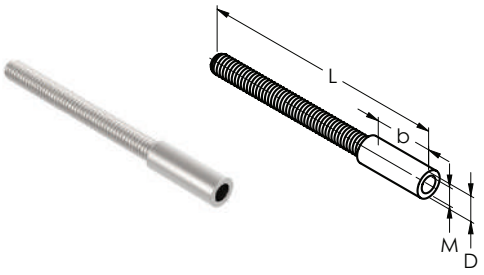

Quality	Finish	art.	M	L	D	b
AISI304	raw	A19/27-M8	8	140	11	15
		A19/27-M10	10		13	
		A19/27-M12	12	130	15	25

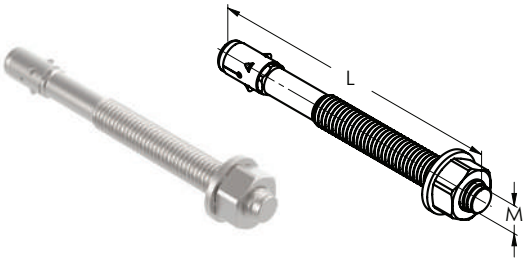

Quality	Finish	art.	M	L
steel	Zn	Q5/06-8x100CE	8	92
		Q5/06-10x120CE	10	120
	raw	Q5/08-FBN12-30	12	126
	Zn	Q5/06-16x123CE	16	123
		Q5/06-16x138CE	16	138
AISI304	raw	A-Q5/06-10x120CE	10	120

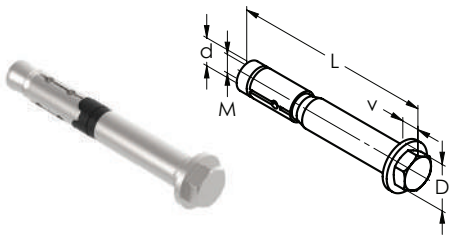

Quality	Finish	art.	M	L	d	D/v
steel	Zn	Q5/08-HAZ-M8-85S/S	8	85	12	20/7,5
	raw	Q5/08-FH15/25 S	10	89	15	25/9,5
	Zn	Q5/08-HAZ-M10-106S/S		106		
AISI316	raw	A5/08-HAZ-M8-85S/A4	8	85	12	20/7,5
		A5/08-HAZ-M10-106S/A4	10	106	15	25/9,5

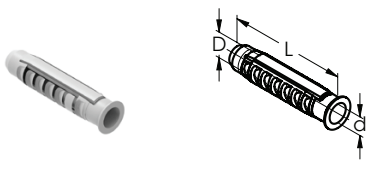

Quality	Finish	art.	D	d	L
NYLON	gray	Q5/07-8 NYLON	8	2,5-4	40
		Q5/07-10 NYLON	10	3-6	50
		Q5/07-12 NYLON	12	4-8	60

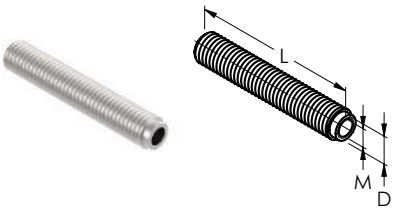

Quality	Finish	art.	M	L	D
steel 5.8	Zn	Q5/08-VI-IG-M8-100/S	8	100	12
		Q5/08-VI-IG-M10-80/S	10	80	16
		Q5/08-VI-IG-M12-125/S	12	125	20
AISI316	raw	A5/08-VI-IG-M8-100/A4	8	100	12
		A5/08-VI-IG-M10-80/A4	10	80	16
		A5/08-VI-IG-M12-125/A4	12	125	20

art.	ml	quality	description
Q5/01GF-300 Nordic		vinylester	-20°C +10°
Q5/01GF-400 Nordic			
Q5/01GF-300			-10°C +30°C
Q5/01GF-400			

top

art.	ml	quality	description
Q5/01B-300		vinylester	-10°C +40°C
Q5/01B-400			-10°C +40°C
Q5/01B-400 Winter			-20°C +20°C

new

art.	ml	quality	description
Q5/01GFP-300		Polyester	-5°C +30°C
Q5/01GFP-400			

art.	ml	quality	description
Q5/05TR-310		Silicone	-5°C +40°C

art.	ml	quality	description
Q5/01-WIT-UH300...	320	uretan vinylester	-5°C +40°C
Q5/01-WIT-VM250...	300	vinylester	-10°C +40°C

Q5/04-250

art.	M	L
Q5/04	17	215
Q5/04-250	8	250

new

art.	description
Q5/03-300	300ml, hobby

art.	description
Q5/03-400	400ml, profi

art.	description
Q5/01-16x130	mesh

art.	description
GS-AL/D115-70	suction cup

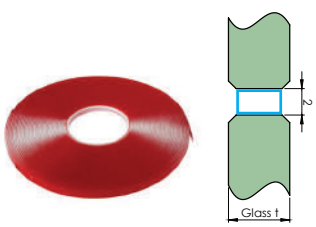

art.	t (mm)	b (mm)	L (m)
Q9/03-2x6	2	6	16,5

Quality	Finish	art.
AISI304	satin	PNL/HANDLES

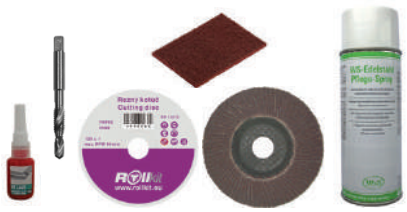

Q/INOX-INSTALL-SET

Q/INOX-INSTALL-SET-B new

art.								
Q/INOX-INSTALL-SET	1x	-	-	1x	1x	1x	1x	1x
Q/INOX-INSTALL-SET-B	-	1x	1x	2x	2x			2x

art.	g	gap	description
A/Glue-10g-C	10	0,2	INOX

art.	g	gap	description
A/Glue-20g	20	0,2	all purpose superfast

art.	g	gap	description
A/GLUE-50g-C	50	0,2	INOX
A/GLUE-50g-D		0,4	INOX

new

art.	ml	description
Q5/05-MAMUT	290	instant fix

new

art.	ml
GS/Cleaner-Glass	200

new

art.	ml
GS/Cleaner-Metal	200

A/ACTIVATOR

CA/ACTIVATOR

CA/LAK

art.	g	description	
A/ACTIVATOR-50g	50	for A/Glue..	new
CA/ACTIVATOR	1000	corten effect	new
CA/LAK		lacquer for corten	new

art.	ml	description	
A/spray-WS	400	INOX	top

art.	ml	description
A/Cleaner-500ml	500	INOX

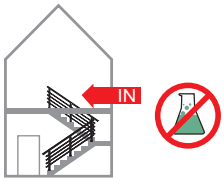

INOX			ALUMINIUM	ZAMAK
AISI304	AISI316	S.S. 2205		
✓	✓	✓	✓	✓

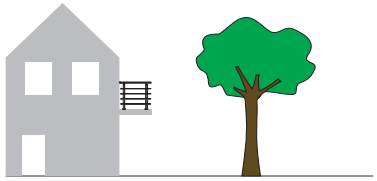

INOX			ALUMINIUM	ZAMAK
AISI304	AISI316	S.S. 2205		
✓	✓	✓	✓	✗

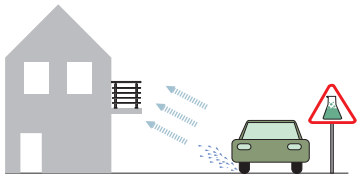

INOX			ALUMINIUM	ZAMAK
AISI304	AISI316	S.S. 2205		
✗	✓	✓	✓	✗

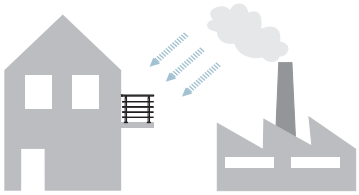

INOX			ALUMINIUM	ZAMAK
AISI304	AISI316	S.S. 2205		
✗	✓	✓	✓	✗

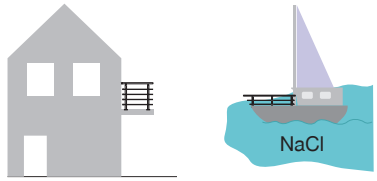

INOX			ALUMINIUM	ZAMAK
AISI304	AISI316*	S.S. 2205		
✗	✓	✓	✓	✗

* only mirror finish (polished)

INOX			ALUMINIUM	ZAMAK
AISI304	AISI316	S.S. 2205		
✗	✗	✓	✗	✗

		SK	PL	HU	GB	DE	FR
material	AISI304 / AISI316 / S.S. 2205	nerezová oceľ	stal nierdzewna	rozsdamentes acél	stainless steel	Edelstahl	INOX
	CORTEN	corten oceľ	corten stal	corten acél	corten steel	Cortenstahl	corten
	ALUMINIUM	hliník	aluminium	alumínium	aluminium	Aluminium	aluminium
	ZAMAK	zliatina Zn+Al	stop cynku i aluminium	Zn+Al ötvözet	ZAMAC	Zinkdruckguss	alliage Zn+Al
	Fe	železo	żelazo	vas	iron	Eisen	fer
	Zn	zinok	cynk	cink	zinc	Zink	zinc
	Brass	mosadz	miedź	sárgaréz	brass	Messing	laiton
	PVC	polyvinyl chloride					
	PETG	polyethylene terephthalate glycol					
	Rubber	guma	guma	gumi	rubber	Gummi	gomme
	Beech	buk	buk	bükk	beech	Buche	hêtre
	Oak	dub	dąb	tölgy	oak	Eiche	chêne
	Spruce	smrek	świerk	lucfenyő	spruce	Fichte	épicéa
	VSG/ESG	sklo	szkło	üveg	glass	Glas	verre
finish/effect	satin	brus K320	szlif K320	szálcsiszolt K320	brushed K320	geschliffen K320	brossé K320
	silver	strieborný	srebro	ezüst	silver	Silber	argent
	polish	lesk	polerowany	tükör polírozott	polished	poliert	poli
	raw	surový	surowy	nyers	raw	roh	brossé
	natural	nebrúsený	neszlifovany	natúr	rough	ungeschliffen	non-brossé
	INOX	nerez	nierdzewny	rozsdamentes	inox	Edelstahl	inox
	ELOX	eloxovaný	anodowany	eloxált	elox	Eloxiert	anodisé
		potrebné úpravy	niezbędne przystosowanie	szükséges módosítás	necessary modification	Anpassung ist notwendig	modification nécessaire
	not assembled	nezmontované	niezłożone	nem összeszerelt	not assembled	unmontiert	non assemblé
	≈	približný rozmer	przybliżone wymiary	közelítő méretek	approximate dimension	die Abmes-sungen sind ungefähr	dimensions approximatives
	top	bestseller	bestseller	legjobban eladott	best seller	Bestseller	best-seller
	new	novinka	nowość	új	new	Neuheit	nouveau
		RAL color					
	PVD	PVD = (physical vapor deposition) coating PVD-L = polished surface finish					
	LED	LED					

INOX AISI 304
- vhodný do prostredia bez chlóru a oxidu siričitého

INOX AISI 316
- vhodný do prostredia s vysokým obsahom chlóru, oxidu siričitého, vysokej vlhkosti, do prímorských regiónov

INOX S.S. 2205- vhodný do prostredia s vysokým obsahom chlóru, oxidu siričitého, vysokej vlhkosti s prítomnosťou soli na pobreží a na voľnom mori.

INOX AISI 304
- suitable for the environment without chlorine and sulphur dioxide load

INOX AISI 316
- suitable for the environment with a high content of chlorine, sulphur dioxide load, high humidity, coastal regions

INOX S.S. 2205
- Suitable for environments with a high content of chlorine, sulfur dioxide, high humidity with salt on the coast and on the high seas.

INOX AISI 304
- przeznaczone dla środowiska bez dwutlenku siarki oraz chloru

INOX AISI 316
- przeznaczone dla środowiska o wysokiej zawartości dwutlenku siarki oraz chloru, wysokiej wilgotność oraz w regionach nadmorskie

INOX S.S. 2205
- Nadaje się do środowisk o wysokiej zawartości chloru, dwutlenku siarki, o wysokiej wilgotności, o dużym zasoleniu, w strefach nadmorskich, lub w bezpośrednim kontakcie z wodą morską.

INOX AISI 304
- alkalmazható olyan környezetben, ahol nincs klór és kén-dioxid terhelés

INOX AISI 316
- alkalmazható olyan környezetben, ahol magas a klór-, vagy kén-dioxid terhelés, magas a páratartalom, tengerparti régiókban

INOX S.S. 2205
-„Alkalmazható magas klór-, kén-dioxid-, sós nedvességtartalmú környezetben, valamint tengerparton és a nyílt tengeren“.

INOX AISI 304
- geeignet in Umgebung ohne Chlor und Schwefeldioxid

INOX AISI 316
- geeignet in Umgebung mit einem hohen Gehalt an Chlor, Schwefeldioxid oder in Umgebung mit hoher Luftfeuchtigkeit, in Küstenregionen

INOX S.S. 2205
- geeignet für Umgebungen mit hohem Gehalt an Chlor, Schwefeldioxid und hoher Luftfeuchtigkeit mit Salz an der Küste und auf hoher See

INOX AISI 304
- Convenable pour les environnements sans chlore et/ ou bioxyde de soufre

INOX AISI 316
- Convenable pour les environnements avec un contenu élevé de chlore et/ ou de bioxyde de soufre, une grande humidité, régions maritimes

INOX S.S. 2205
- Convenable au milieu avec un contenu élevé du dioxyde de soufre, ainsi qu'au milieu humide contentant du sel, tel que le bord de mer ou la mer ouverte.

TEST / CERTIFICATE

LGA tested · AbP · IKA ES · Static Studio · Faculty of Civil Engineering · Gamin · Infraprojekt S.C. · TESTED BY RISE SWEDEN · umakov TESTING

právo na technické, tvarové a rozmerové zmeny vyhradené/ **rights to technical, shape and dimensional changes reserved**